REV.	ECN NO OR DESCRIPTION	REVISED	DATE
A	PRODUCT RELEASE	JASON	2012.10.04
B	ECN NO.T120139 B	JASON	2012.10.18

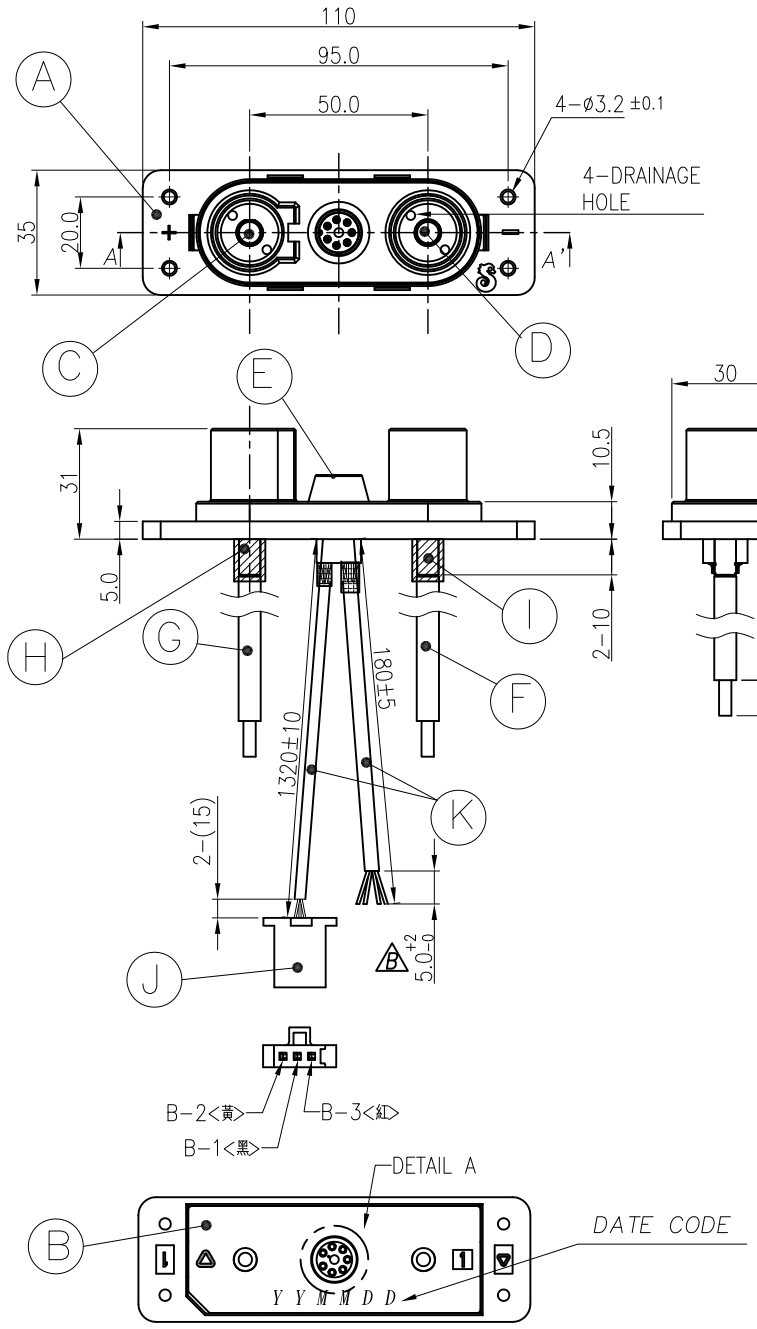

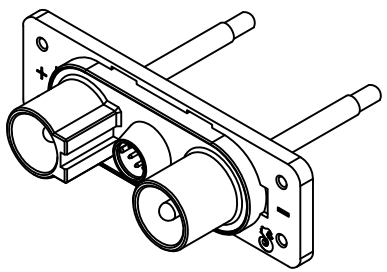

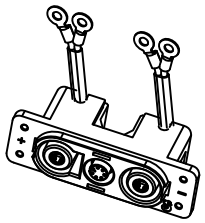

MATING PART
P/N : 2BA1010-003210H

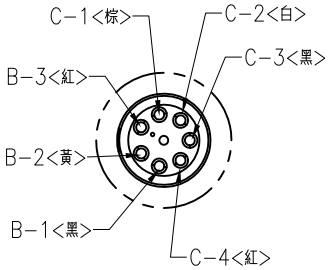

DETAIL A
SCALE2:1

SPECIFICATIONS:

1. ELECTRICAL CHARACTERISTICS:
   1-1. RATING: 60V DC 60A
   1-2. CONTACT RESISTANCE: PIN(+/-)2.0mΩ MAX.(WITH WIRE)
   1-3. CONTACT RESISTANCE: DETECT PIN50mΩ MAX.(WITH WIRE)
2. MECHANICAL CHARACTERISTICS:
   2-1. INSERTION FORCE : 10KGF Max.(INITIAL)
   2-2. WITHDRAWAL FORCE :10KGF Max.(INITIAL)
3. LIFE TEST: 5,000 CYCLES MIN.
4. OTHER GENERAL SPEC. TO REFER "2BW1011-005210H SPEC".
5. TO CONFORM TO SINGATRON HAZARDOUS SUBSTANCE FREE SPEC.
6. GREEN PRODUCT IDENTIFICATION MARK ON JACK:
7. PRODUCT IDENTIFICATION LABEL ON PACKAGING: RoHS
8. PACKAGING: BAG

NO	DESCRIPTION	QTY	MATERIAL	PLATING & COLOR
C-1	1007 80°C 22AWG	1	L=180mm	棕色
C-2	1007 80°C 22AWG	1	L=180mm	白色
C-3	1007 80°C 22AWG	1	L=180mm	黑色
C-4	1007 80°C 22AWG	1	L=180mm	紅色
B-1	1015 E315421 VW-1 105°C 18AWG	1	L=1320mm	黑色
B-2	1015 E315421 VW-1 105°C 18AWG	1	L=1320mm	黃色
B-3	1015 E315421 VW-1 105°C 18AWG	1	L=1320mm	紅色
K	HEAT SHRINK TUBE	2	SEE DRAWING	BLACK COLOR
J	HOUSING	1	3ML3BN02N	WHITE COLOR
I	HEAT SHRINK TUBE	1	L=20mm	BLACK COLOR
H	HEAT SHRINK TUBE	1	L=20mm	RED COLOR
G	WIRE	1	UL1028 8AWG 210mm	RED COLOR
F	WIRE	1	UL1028 8AWG 210mm	BLACK COLOR
E	7PIN CONNECTOR	1	COPPER ALLOY	GOLD PLATING
D	PIN(-)	1	COPPER ALLOY	SILVER PLATING
C	PIN(+)	1	COPPER ALLOY	SILVER PLATING
B	COVER	1	HIGH TEMP. THERMOPLASTIC UL 94V-0	BLACK COLOR
A	HOUSING	1	HIGH TEMP. THERMOPLASTIC UL 94V-0	BLACK COLOR

UNLESS OTHERWISE SPECIFED TOLERANCES

DECIMALS: X :±0.5, X.X :±0.3, X.XX :±0.2
ANGLES: X :±2°, X.X :±1°

Singatron Enterprise Co., Ltd.
信音企業股份有限公司

TITLE	BATTERY CONNECTOR+WIRE		
DWN	JASON 2012.11.5	PART NO.2BW1011-005210H	
CHKD		SCALE0.1:1	UNIT: mm
APVD	ACHENG	SIZE: A3	SHEET:1 OF 1	REV: B

CUSTOMER COPY

文件編號 RD-06-043-A