REV.	ECN NO OR DESCRIPTION	REVISED	DATE
A	PDR NO:A190829-3A	JY	2021.12.04

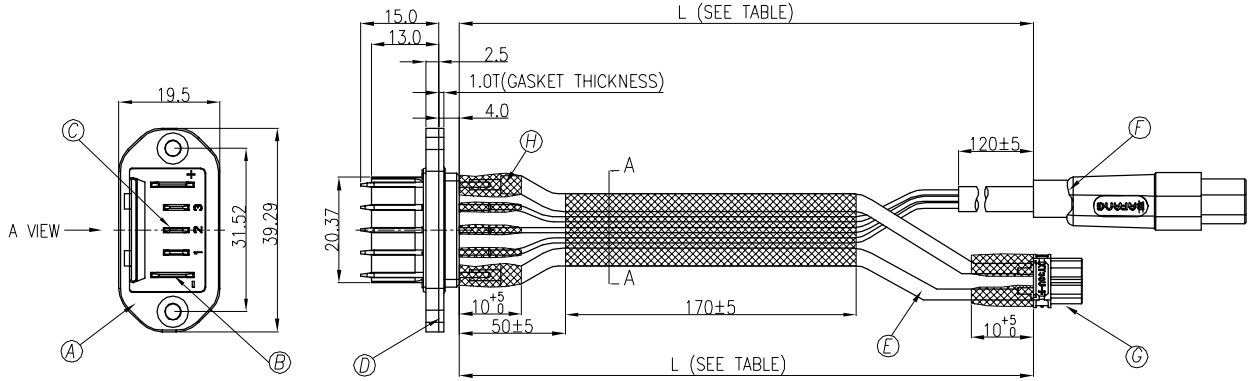

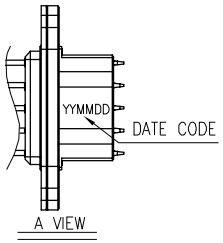

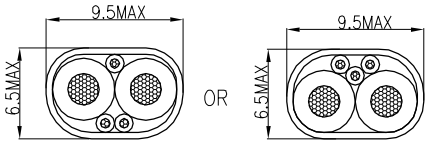

SECTION A-A

SPECIFICATIONS:

1. ELECTRICAL CHARACTERISTICS:
   1-1. RATING:DC48V,14A
   1-2. CONTACT RESISTANCE: 20mΩ MAX.(FOR CONNECTOR)
   1-3. DIELECTRIC WITHSTANDING VOLTAGE: 500V AC FOR ONE MINUTE.
   1-4. INSULATION RESISTANCE: 50MΩ MIN. MEASURED BY 500 VDC
2. MECHANICAL CHARACTERISTICS:
   2-1. INSERTION/WITHDRAWL FORCE : 6N~60N
3. TEMPERATURE RISE CAN'T EXCEED 30°C (FOR CONNECTOR)
4. LIFE TEST: 1500 CYCLES MIN.
5. TO CONFORM TO SINGATRON HAZARDOUS SUBSTANCE FREE SPEC.
6. GREEN PRODUCT IDENTIFICATION LABEL ON PACKAGING: G.P. PASS

CONN.1	CONN.2	CONN.3	WIRE SPEC.	WIRE LENGTH(L)
1		3	RED(28AWG,PVC)	300±5
3		2	BLUE(28AWG,PVC)	
2		1	BLACK(28AWG,PVC)	
+	+		RED(14 AWG,SILICONE)	
−	−		BLACK(14AWG,SILICONE)	

PIN OUT

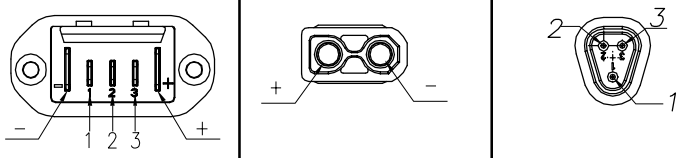

Pin Assignments
Front View

NO	DESCRIPTION	QTY	MATERIAL	PLATING & COLOR
H	HEAT SHRINK TUBE	8	POLYOLEFIN	BLACK
G	CONNECTOR	1	AMASS,XT30U-F	N/A
F	CONNECTOR+CABLE	1	HIGO 3PIN HARNESS	N/A
E	WIRE	2	14AWG,SILICONE	BLACK&RED
D	GASKET	1	RUBBER	BLACK
C	SIGNAL TERMINAL	3	BRASS	Ni PLATING
B	POWER TERMINAL	2	BRASS	Ni PLATING
A	HOUSING	1	THERMOPLASTIC	BLACK

UNLESS OTHERWISE SPECIFED TOLERANCES

DECIMALS: X :±0.5, X.X :±0.3, X.XX :±0.2

ANGLES: X :±2°, X.X :±1°

Suzhou Singatron Auto Electronics CO.,LTD.
蘇州信音汽車電子有限公司

TITLE	MALE BATTERY CONN. HARNESS			
DWN	JY	PART NO. 2BW3021-W05R02H		
CHKD	JF	SCALE:N/A	UNIT: mm	
APVD	JF	SIZE: A3	SHEET:1 OF 1	REV: A

CUSTOMER COPY

文件編號 RD-06-043-A