REV.	ECN NO OR DESCRIPTION	REVISED	DATE
1	PDR NO.:T100429-15A	joe-liao	2010.04.29

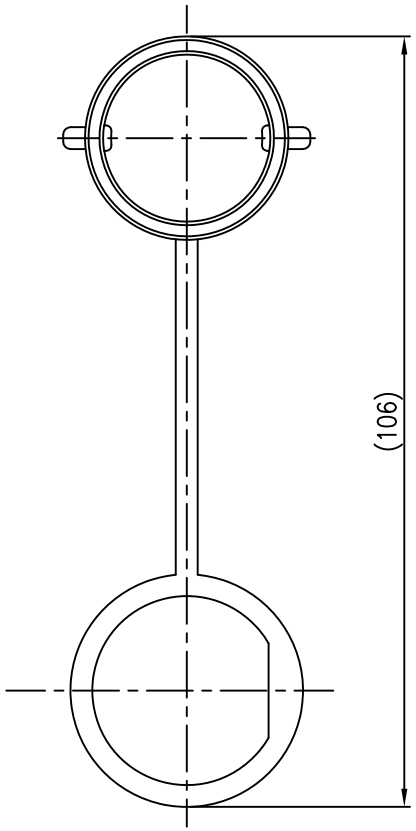

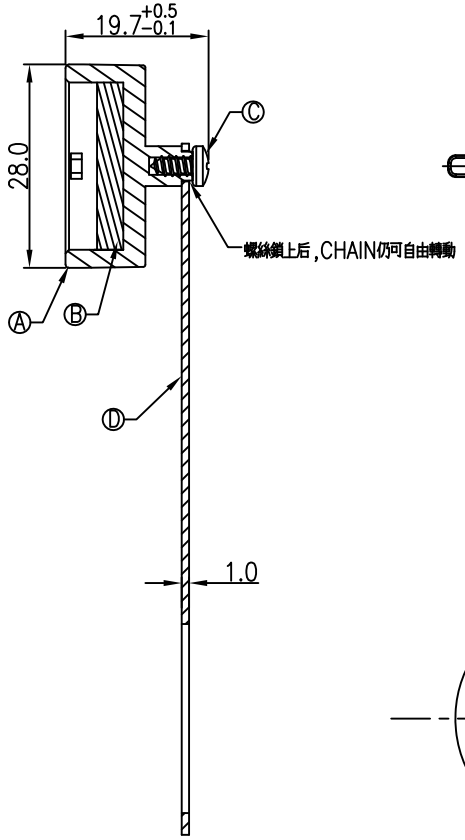

A–A SECTION

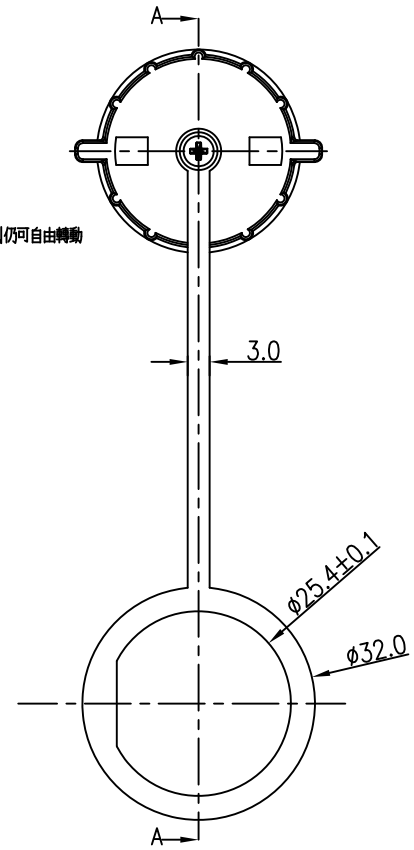

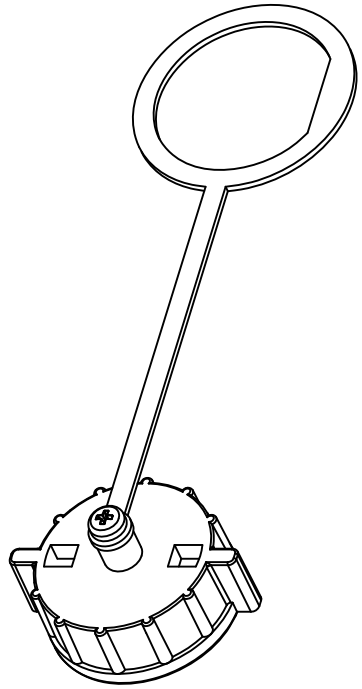

NOTES:
1. WATERPROOF RATE: IP67
   IP67: IMMERSED IN 1M WATER FOR 30 MINUTES
2. TO CONFORM TO SINGATRON HAZARDOUS SUBSTANCE FREE SPEC.
3. GREEN PRODUCT IDENTIFICATION LABEL ON PACKAGING: G.P. PASS
4. FOR PANEL THICKNESS MAX OF 2.8mm

NO	DESCRIPTION	QTY	MATERIAL	PLATING & COLOR
D	CHAIN	1	TPU	BLACK
C	SCREW	1	STAINLESS STEEL	N/A
B	GASKET	1	EPDM	BLACK
A	LOCK NUT	1	NYLON+GF	BLACK

UNLESS OTHERWISE SPECIFED TOLERANCES

DECIMALS: X :±0.5, X.X :±0.3, X.XX:±0.2

ANGLES: X :±2°, X.X±1°

Singatron Enterprise Co., Ltd.
信音企業股份有限公司

TITLE	CIRCULAR LARGE SIZE WATERPROOF CAP LOCK TYPE (IP67)		
DWN	Shawn	PART NO.2CG3000-W0000W	
CHKD	Steve	SCALE 2:1	UNIT: mm
APVD	Max	SIZE: A3	SHEET:1 OF 1 REV: A

CUSTOMER COPY

文件編號 RD-06-043-A