| REV. | ECN NO OR DESCRIPTION | REVISED | DATE |
|---|---|---|---|
| A | PDR NO.T200407-5A | JAY | 2021.05.29 |

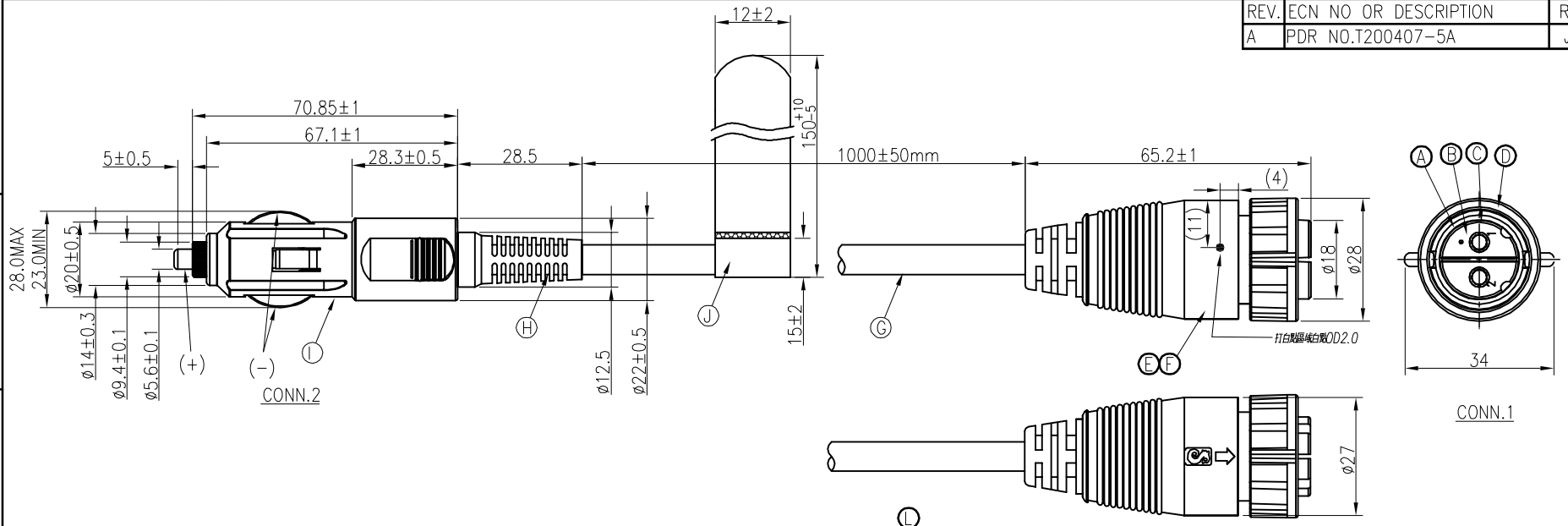


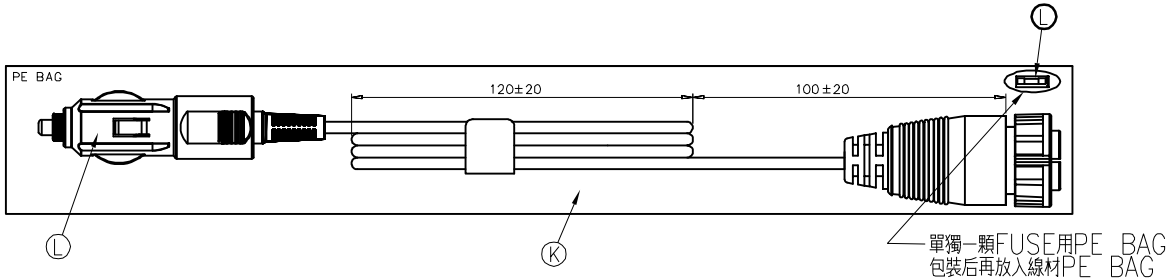


| | | |
|---|---|---|
| − | BLACK | 2 |
| + | WHITE | 1 |
| CONN.2 | Wire Color | CONN.1 |
| PIN OUT | | |

CONN.1

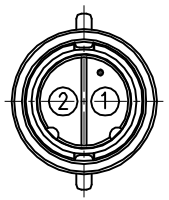


Pin Assignments
Front View

NOTES:
1. WATERPROOF RATE: IP67(WHEN PROPERLY MATED)
2. CURRENT RATING: 10A
3.ENVIRONMENT-RELATED SUBSTANCES SHALL MEET DELTA GENERAL SPEC.:10000-0162
4.正極圓環套SUS304表面處理：鈍化(I-001-242Z)
5.保險絲帽C3604 NI 50-80U"(HCL092C20100)
6.正極螺母C3604 NI 50-80U"(HCL092C30100)
7.保險絲：L* 5MM 25V 12A 慢斷型 材質：陶瓷(EFD50201210)
8.彈簧：材質：中碳鋼 0.5mm鍍Ni 50U", (HCL051C20000)
9.負極彈片：材質C5210 T=0.5MM 鍍Ni 50U"(HCL092C40100)
10.雪茄頭上下蓋 黑色材質：PC(SABIC LEXAN 945,UL-E207780)
11.保險絲墊片C3604 NI 50~80U"(HCL092C60100)
12.保險絲座(HCL092C50100) 材質：C2680/T0.3 電鍍：Ni50~80U"

| NO | DESCRIPTION | QTY | MATERIAL | PLATING & COLOR |
|---|---|---|---|---|
| L | FUSE | 2 | N/A | N/A |
| K | PE BAG | 1 | 240L*100W | TRANSPARENT |
| J | 魔鬼氈束帶 | 1 | PA 12MM*150MM | BLACK |
| I | CIGAR LIGHTER | 1 | NOTES:6~14 | BLACK |
| H | SR | 1 | PVC | BLACK |
| G | CABLE | 1 | UL SVT #16AWG*2C OD6.7 | BLACK(PVC JACKET) |
| F | INNER MOLD | 1 | TPU | NATURAL |
| E | OVER MOLD | 1 | PVC | BLACK |
| D | O-RING | 1 | EPDM | BLACK |
| C | LOCK NUT | 1 | NYLON+GF | BLACK |
| B | FEMALE PIN | 2 | Phosphor Bronze | 1~3u" GOLD PLATING OVER NICKEL PLATING |
| A | BODY | 1 | NYLON+GF | BLACK |

UNLESS OTHERWISE SPECIFED TOLERANCES

DECIMALS: X :±0.5, X.X :±0.3, X.XX :±0.2
ANGLES: X :±2°, X.X :±1°

Suzhou Singatron Auto Electronics CO.,LTD.
蘇州信音汽車電子有限公司

| | | | | |
|---|---|---|---|---|
| TITLE | CIRCULAR LARGE SIZE (IP67) FEMALE CONN. FEMALE 2 PIN(10A) LOCK TYPE | | | |
| DWN | JAY | PART NO.2CG3004-W02G13H | | |
| CHKD | JF | SCALE 1:1 | UNIT: mm | |
| APVD | Steve | SIZE: A3 | SHEET:1 OF 1 | REV: A |

CUSTOMER COPY

文件編號:RD-06-043-A