REV.	ECN NO OR DESCRIPTION	REVISED	DATE
A	PDR NO.: T120522-10A	Shawn	2012.08.30

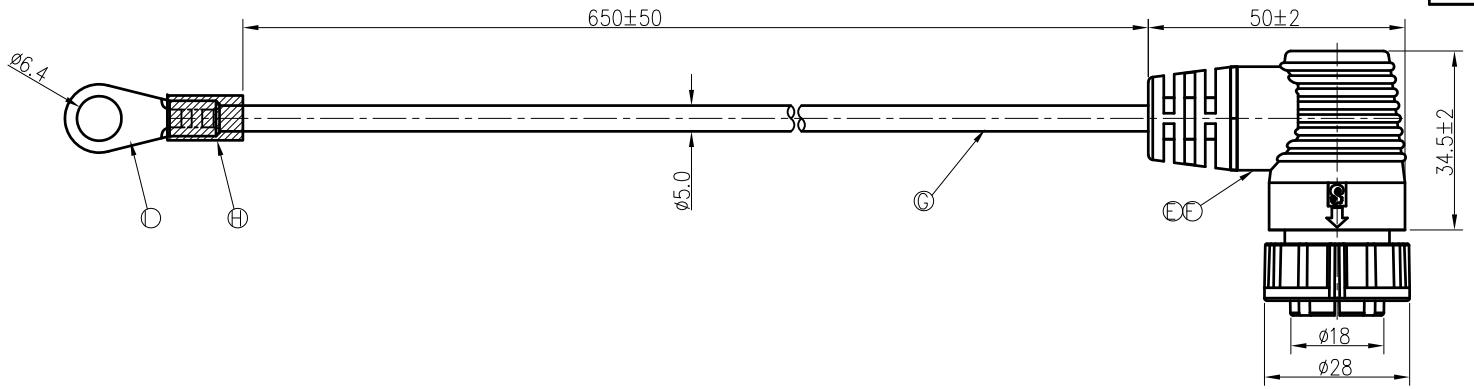

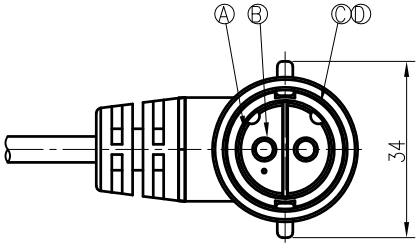

CONN.
WATERPROOF RATE: IP67

/	2
YELLOW	1
WIRE COLOR	CONN

PIN OUT

CONN.

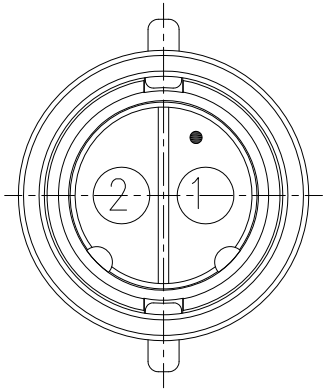

Pin Assignments
Front View

NOTES:
1. WATERPROOF RATE: IP67
   IP67: IMMERSED IN 1M WATER FOR 30 MINUTES
2. CURRENT RATING: 40A
3. SPECIFICATIONS: SEE "CIRCULAR SERIES SPECIFICATIONS".
4. TO CONFORM TO SINGATRON HAZARDOUS SUBSTANCE FREE SPEC.
5. GREEN PRODUCT IDENTIFICATION LABEL ON PACKAGING: G.P. PASS

NO	DESCRIPTION	QTY	MATERIAL	PLATING & COLOR
I	TERMINAL	1	KST RNBL8-6	TIN PLATED
H	HEAT SHRING TUBE	1	125° 300V	BLACK
G	WIRE	1	UL 1015 10AWG	YELLOW
F	INNER MOLD	1	TPU	NATURAL
E	OVER MOLD	1	PVC	BLACK
D	O-RING	1	EPDM	BLACK
C	LOCK NUT	1	NYLON+33%GF	BLACK
B	FEMALE PIN	2	Phosphor Bronze	1~3u" GOLD PLATING OVER NICKEL PLATING
A	BODY	1	NYLON+33%GF	BLACK

UNLESS OTHERWISE SPECIFED TOLERANCES

DECIMALS: X :±0.5, X.X :±0.3, X.XX :±0.2
ANGLES: X :±2°, X.X :±1°

Singatron Enterprise Co., Ltd.
信音企業股份有限公司

TITLE	CIRCULAR LARGE SIZE (IP67) FEMALE CONN. FEMALE 2 PIN(40A) LOCK TYPE		
DWN	Shawn	PART NO.2CG3010-W02G02H	
CHKD	Harlen	SCALE 1:1	UNIT: mm
APVD	Steve	SIZE: A3	SHEET: 1 OF 1 — REV: A

CUSTOMER COPY

文件編號:RD-06-043-A