RoHS

REV.	ECN NO OR DESCRIPTION	REVISED	DATE
A	PDR NO.T151005-3A	Yang	2017.06.06

SPECIFICATIONS:

1. ELECTRICAL CHARACTERISTICS:
   1-1. INPUT VOLTAGE: 9V~16V
   1-2. OUTPUT VOLTAGE: 4.55V~5.25V
   1-3. MAXIMUM OUTPUT CURRENT: 4.2A(2.1A+2.1A)
   1-4. OPERATING TEMPERATURE: -20°C~+50°C
2. LIFE TEST: 5,000 CYCLES.
3. RoHS COMPLIANT
4. NORMALLY OPEN SPRING CAP

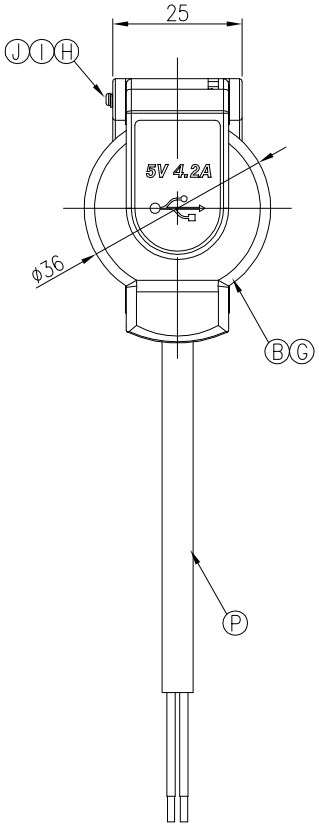

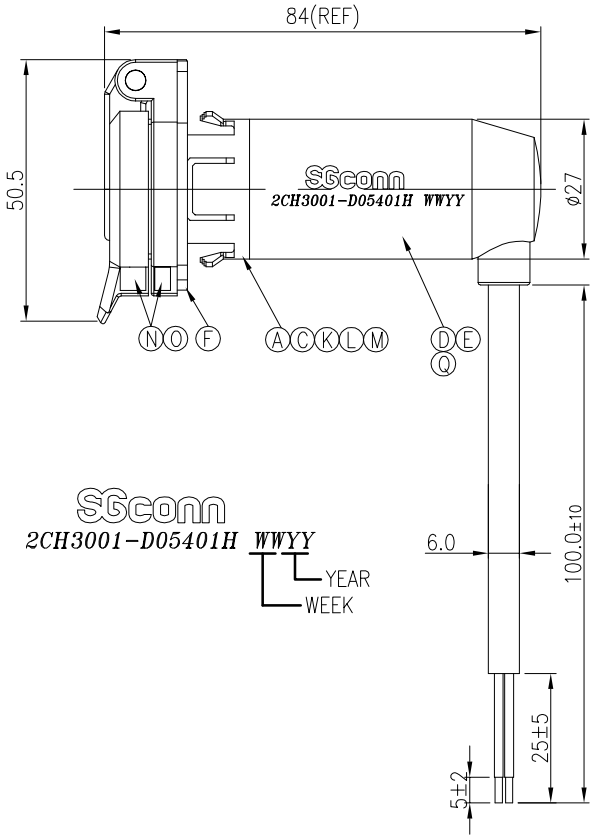

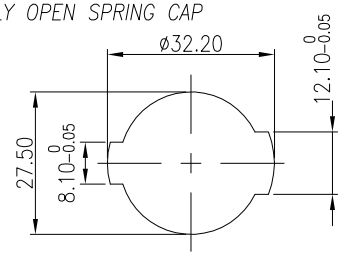

PANEL CUT-OUT
PANEL THICKNESS OF 2.5~3.0mm

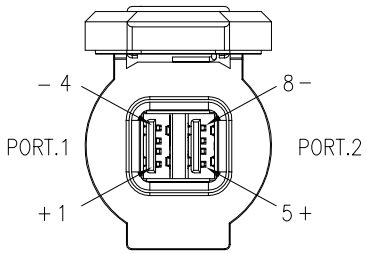

CAP OPEN

NO	DESCRIPTION	QTY	MATERIAL	PLATING & COLOR
Q	ROUND TUBE	1	PC	BLACK
P	CABLE	1	2464 AWM 16AWG 2C UV OD:6.0mm BLACK	4CM3004-W02604
O	STOPPER	2	PVC	BLACK
N	MAGNET	2	NdFeB	NICKEL
M	GLUE	1	N/A	BLACK
L	USB2.0	1	N/A	4UB3005-W0510J
K	PCBA	1	FR-4	N/A
J	AXIS	1	SUS	NATURAL
I	SPRING	1	SUS	NATURAL
H	E-RING	1	SUS	NATURAL
G	CAP GASKET	1	SILICONE	RED
F	GASKET	1	SILICONE	BLACK
E	OVER MOLD	1	TPU	BLACK
D	INNER MOLD	1	TPU	NATURAL
C	COVER	1	ABS	NATURAL
B	CAP	1	PC	BLACK
A	BODY	1	PC	BLACK

WIRE	PORT 1	PORT 2
RED +	1	5
BLACK -	4	8

UNLESS OTHERWISE SPECIFED TOLERANCES

DECIMALS: X :±0.5, X.X :±0.3, X.XX :±0.2

ANGLES: X :±2°, X.X :±1°

Singatron Enterprise Co., Ltd.
信音企業股份有限公司

TITLE	WATERPROOF USB CAR CHARGER 12V 4.2A NORMALLY OPEN SPRING CAP			
DWN	Yang	PART NO.2CH3001-W05401H		
CHKD	JF	SCALE 1:1	UNIT: mm	
APVD	Steve	SIZE: A3	SHEET:1 OF 1	REV:A

CUSTOMER COPY

文件編號 RD-06-043-A