REV.	ECN NO OR DESCRIPTION	REVISED	DATE
C	ECN NO.:S160914-R	JF	2016.09.12
A	PDR NO.:T080815A3C	Steve	2009.04.28
B	ECN NO.:S121109	YF	2014.03.27

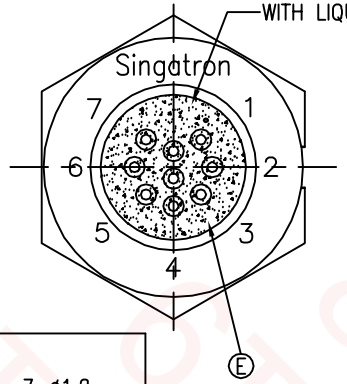

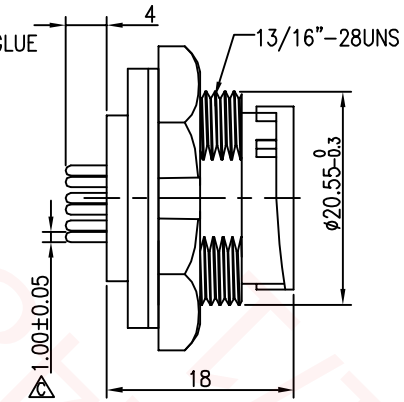

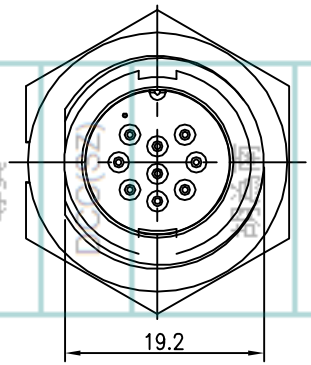

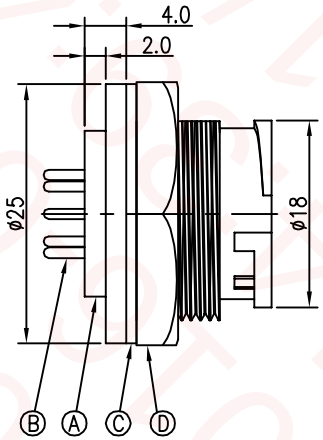

NOTES:
1. WATERPROOF RATE: IP67
   IP67: IMMERSED IN 1M WATER FOR 30 MINUTES
2. ELECTRICAL CHARACTERISTICS
   TEMPERATURE RANGE: -40°C TO +100°C
   CURRENT RATING: 5A
   DIELECTRIC WITHSTANDING VOLTAGE: 500V AC FOR ONE MINUTE
3. SPECIFICATIONS:SEE "CIRCULAR SERIES SPECIFICATIONS".
4. TO CONFORM TO SINGATRON HAZARDOUS SUBSTANCE FREE SPEC.
5. GREEN PRODUCT IDENTIFICATION LABEL ON PACKAGING: G.P. PASS
6. FOR PANEL THICKNESS MAX OF 3.5mm
7. ORDER INFORMATION: 2CM3000-W0X300
   - 3-CURRENT RATING 5A
   - 07- 7 PIN
   - 08- 8 PIN
   - 09- 9 PIN

P/N:	PIN ASSIGNMENTS FRONT VIEW	PCB LAYOUT
2CM3000-W07300	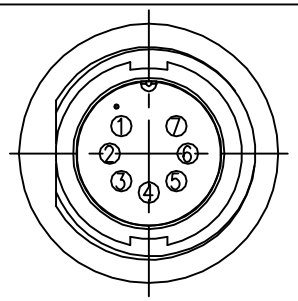	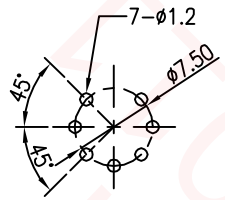
2CM3000-W08300	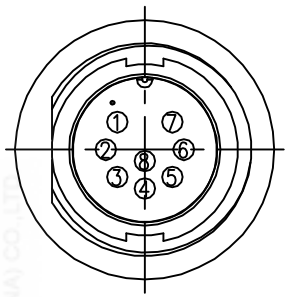	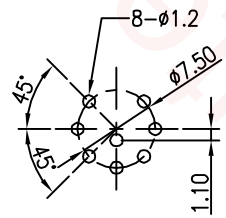
2CM3000-W09300	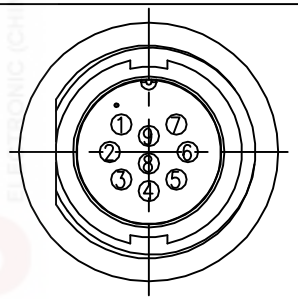	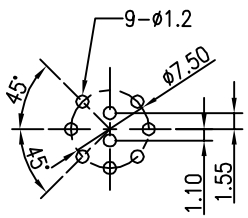

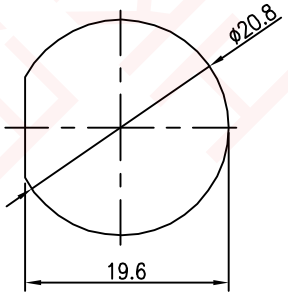

RECOMMENDED PANEL CUT-OUT

NO	DESCRIPTION	QTY	MATERIAL	PLATING & COLOR
E	LIQUID GLUE	1	N/A	BLACK
D	NUT	1	NYLON+GF	BLACK
C	GASKET	1	EPDM	BLACK
B	MALE PIN	*	BRASS	6u" GOLD PLATED OVER NICKEL PLATING
A	BODY	1	NYLON+GF	BLACK

UNLESS OTHERWISE SPECIFED TOLERANCES

DECIMALS: X :±0.5, X.X :±0.3, X.XX :±0.2
ANGLES: X :±2°, X.X :±1°

Singatron Enterprise Co., Ltd.
信音企業股份有限公司

TITLE	CIRCULAR MIDDLE SIZE (PCB/LOCK TYPE) MALE CONN. MALE (7~9) PIN(5A)		
DWN	JF	PART NO.2CM3000-W0X300	
CHKD	Yang	SCALE 2:1	UNIT: mm
APVD	Harlen	SIZE: A3	SHEET:1 OF 1 REV:C

CUSTOMER COPY

文件編號:RD-06-043-A