REV.	ECN NO OR DESCRIPTION	REVISED	DATE
A	PDR NO.:S140429-7C	JF	2014.06.03
B	ECN NO.:S141210	JF	2015.01.23

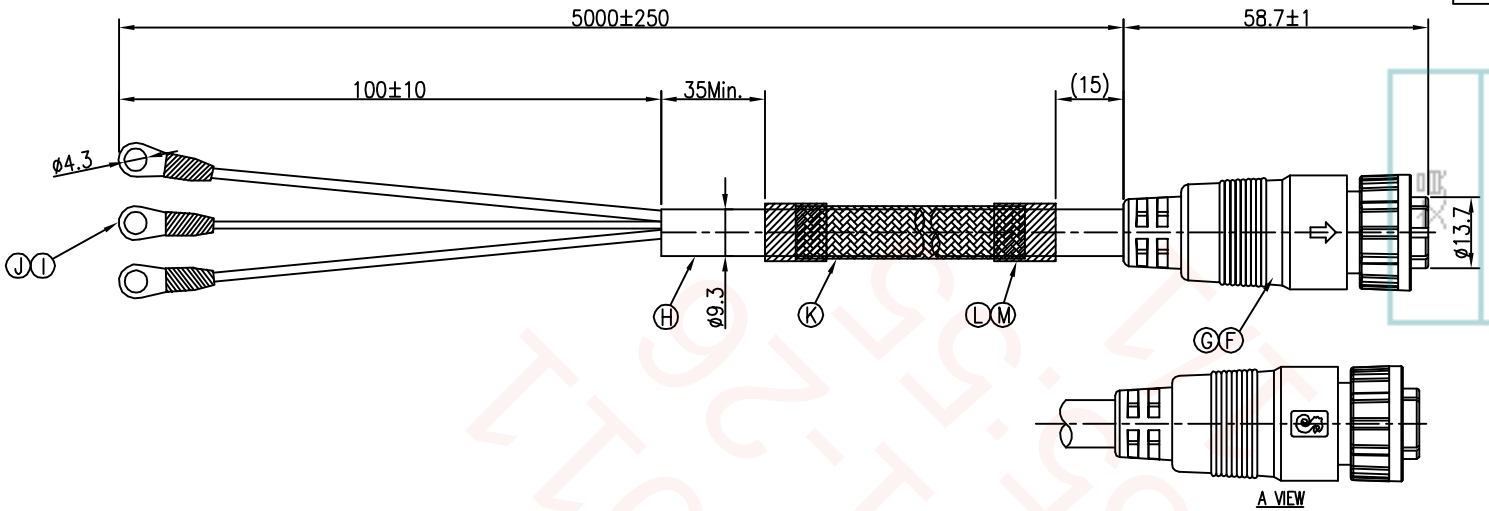

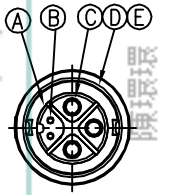

Conn.

WATERPROOF RATE: IP67

M	ACETATE TAPE	2	W20 T0.18	BLACK
L	HEAT SHRINK TUBE	2	ø15.0	BLACK
K	STAINLESS STELL BRAID	1	STAINLESS STEEL	N/A
J	HEAT SHRINK TUBE	3	ø5.0 125° 600V	BLACK
I	O-TERMINAL	3	BRASS	TIN-PLATED
H	CABLE	1	UL2464 14#*3C+(CAT.5E 24#*1P+ADB) (UV) OD9.3	BLACK(PVC JACKET)
G	INNER MOLD	1	TPU	NATURAL
F	OVER MOLD	1	PVC	BLACK
E	O-RING	1	EPDM	BLACK
D	LOCK NUT	1	NYLON+GF	BLACK
C	FEMALE PIN	2	COPPER ALLOY	1~3u" GOLD PLATING OVER NICKEL PLATING
B	FEMALE PIN	3	COPPER ALLOY	1~3u" GOLD PLATING OVER NICKEL PLATING
A	BODY	1	NYLON+GF	BLACK
NO	DESCRIPTION	QTY	MATERIAL	PLATING & COLOR

WIRE COLOR	CONN.	
	5	
	4	
YELLOW/GREEN	3	—E
BLUE	2	—L
BROWN	1	—N

PIN OUT

CONN.

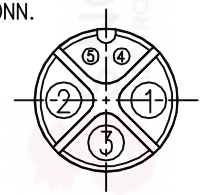

Pin Assignments
Front View

NOTES:
1. WATERPROOF RATE: IP67
2. ELECTRICAL CHARACTERISTICS
   CURRENT RATING: 20+2A
3. SPECIFICATIONS:SEE "CIRCULAR SERIES SPECIFICATIONS".
4. TO CONFORM TO SINGATRON HAZARDOUS SUBSTANCE FREE SPEC.
5. GREEN PRODUCT IDENTIFICATION LABEL ON PACKAGING: G.P. PASS

UNLESS OTHERWISE SPECIFED TOLERANCES

DECIMALS: X :±0.5, X.X :±0.3, X.XX :±0.2

ANGLES: X :±2°, X.X :±1°

Singatron Enterprise Co., Ltd.
信音企業股份有限公司

TITLE	CIRCULAR MIDDLE SIZE (IP67) LOCK TYPE FEMALE CONN. FEMALE PIN (3+2)PIN(20+2A)			
DWN	JF	PART NO.2CM3004-W05E04H		
CHKD	Harlen	SCALE 1:1	UNIT: mm	
APVD	Quan	SIZE: A2	SHEET:1 OF 1	REV: B

CUSTOMER COPY

文件編號:RD-06-043-A

Uncontrolled Exe-TO-STOP 2015/01/26 10:37:21