REV.	ECN NO OR DESCRIPTION	REVISED	DATE
A	PDR NO.:S140506-5E	JF	2014.06.03

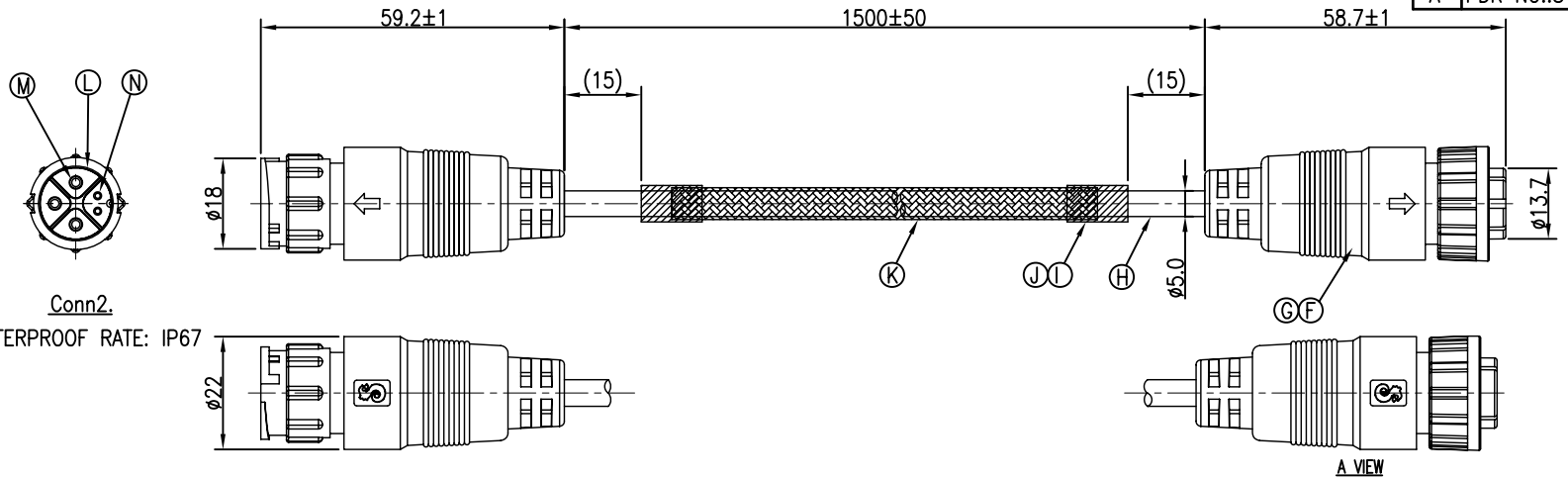

Conn2.
WATERPROOF RATE: IP67

Conn1.
WATERPROOF RATE: IP67

CUS P/N	SINGATRON P/N	CABLE LENGTH
216ZK02FL15	2CM3004-W05E10H	L=1500±50mm

NO	DESCRIPTION	QTY	MATERIAL	PLATING & COLOR
N	MALE PIN	2	BRASS	6u" GOLD PLATING OVER NICKEL PLATING
M	MALE PIN	3	BRASS	1~3u" GOLD PLATING OVER NICKEL PLATING
L	BODY	1	NYLON+GF	BLACK
K	STAINLESS STELL BRAID	1	STAINLESS STEEL	N/A
J	ACETATE TAPE	2	W20 T0.18	BLACK
I	HEAT SHRINK TUBE	2	ø8.0	BLACK
H	CABLE	1	UL2464 24#*1P(CAT.5E)+AL (UV)	BLACK(PVC JACKET)
G	INNER MOLD	2	TPU	NATURAL
F	OVER MOLD	2	PVC	BLACK
E	O-RING	1	EPDM	BLACK
D	LOCK NUT	1	NYLON+GF	BLACK
C	FEMALE PIN	2	COPPER ALLOY	1~3u" GOLD PLATING OVER NICKEL PLATING
B	FEMALE PIN	3	COPPER ALLOY	1~3u" GOLD PLATING OVER NICKEL PLATING
A	BODY	1	NYLON+GF	BLACK

CONN2.	WIRE COLOR	CONN1.
5	WHITE	5
4	GREEN	4
3		3
2		2
1		1

PIN OUT

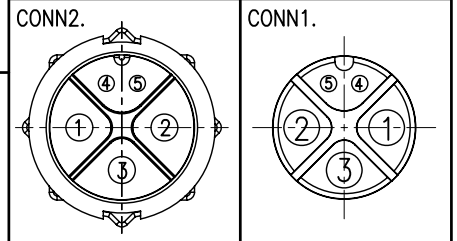

Pin Assignments Front View | Pin Assignments Front View

NOTES:
1. WATERPROOF RATE: IP67
2. ELECTRICAL CHARACTERISTICS
   CURRENT RATING: 20+2A(ONLY CONN.)
3. SPECIFICATIONS:SEE "CIRCULAR SERIES SPECIFICATIONS".
4. TO CONFORM TO SINGATRON HAZARDOUS SUBSTANCE FREE SPEC.
5. GREEN PRODUCT IDENTIFICATION LABEL ON PACKAGING: G.P. PASS

UNLESS OTHERWISE SPECIFED TOLERANCES

DECIMALS: X :±0.5, X.X :±0.3, X.XX :±0.2
ANGLES: X :±2°, X.X :±1°

Singatron Enterprise Co., Ltd.
信音企業股份有限公司

TITLE	CIRCULAR MIDDLE SIZE (IP67) LOCK TYPE FEMALE CONN. FEMALE PIN (3+2)PIN(20+2A)		
DWN	JF	PART NO.2CM3004-W05E10H	
CHKD	Harlen	SCALE 1:1	UNIT: mm
APVD	Quan	SIZE: A2	SHEET:1 OF 1 REV: A

CUSTOMER COPY

文件編號 RD-06-043-A