REV.	ECN NO OR DESCRIPTION	REVISED	DATE
A	PDR NO.:S141219-5A	JF	2015.01.22

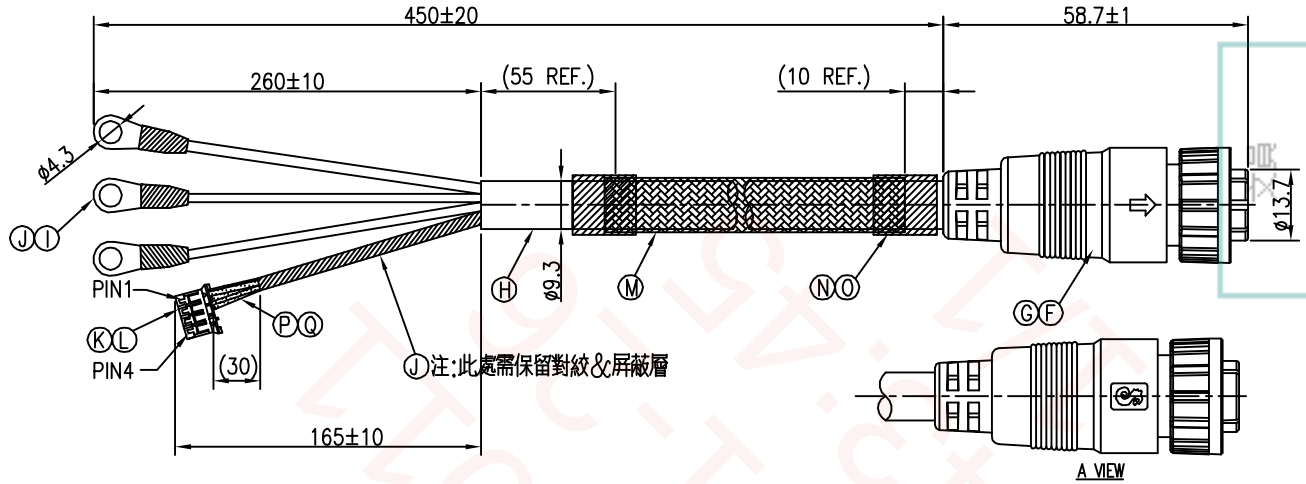

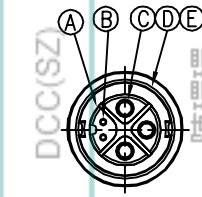

Conn.

WATERPROOF RATE: IP67

NO	DESCRIPTION	QTY	MATERIAL	PLATING & COLOR
O	ACETATE TAPE	2	W20 T0.18	BLACK
N	HEAT SHRINK TUBE	2	ø15.0 L=20mm	BLACK
M	STAINLESS STELL BRAID	1	STAINLESS STEEL	N/A
L	TERMINAL	2	PHOSPHOR BRONZE	1u" GOLD PLATING
K	HOUSING	1	NYLON66	WHITE
J	HEAT SHRINK TUBE	4	ø5.0 125° 600V	BLACK
I	O-TERMINAL	3	BRASS	TIN-PLATED
H	CABLE	1	UL2464 14#*3C+(CAT.5E 24#*1P+ADB) (UV) OD9.3	BLACK(PVC JACKET)
G	INNER MOLD	1	TPU	NATURAL
F	OVER MOLD	1	PVC	BLACK
E	O-RING	1	EPDM	BLACK
D	LOCK NUT	1	NYLON+GF	BLACK
C	FEMALE PIN	3	COPPER ALLOY	1~3u" GOLD PLATING OVER NICKEL PLATING
B	FEMALE PIN	2	COPPER ALLOY	6u" GOLD PLATING OVER NICKEL PLATING
A	BODY	1	NYLON+GF	BLACK

HOUSING	WIRE COLOR	CONN.	
2	WHITE(24AWG)	5	Twist
1	GREEN(24AWG)	4	Twist
	DRAIN+YELLOW/GREEN(14AWG)	3	E
	BLUE(14AWG)	2	L
	BROWN(14AWG)	1	N

PIN OUT

CONN.

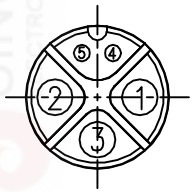

Pin Assignments
Front View

NOTES:
1. WATERPROOF RATE: IP67
2. ELECTRICAL CHARACTERISTICS
   CURRENT RATING: 20+2A
3. SPECIFICATIONS:SEE "CIRCULAR SERIES SPECIFICATIONS".
4. TO CONFORM TO SINGATRON HAZARDOUS SUBSTANCE FREE SPEC.
5. GREEN PRODUCT IDENTIFICATION LABEL ON PACKAGING: G.P. PASS

Q	CONDUCTIVE FABRIC TAPE	1	W15*T0.11	GRAY
P	ACETATE CLOTH TAPE	1	W15*T0.12	BLACK

UNLESS OTHERWISE SPECIFED TOLERANCES

DECIMALS: X :±0.5, X.X :±0.3, X.XX :±0.2

ANGLES: X :±2°, X.X :±1°

Singatron Enterprise Co., Ltd.
信音企業股份有限公司

TITLE	CIRCULAR MIDDLE SIZE (IP67) LOCK TYPE FEMALE CONN. FEMALE PIN (3+2)PIN(20+2A)		
DWN	JF	PART NO.2CM3004-W05E16H	
CHKD	Harlen	SCALE 1:1	UNIT: mm
APVD	Steve	SIZE: A2	SHEET:1 OF 1 REV: A

CUSTOMER COPY

文件編號 RD-06-043-A

DCC(SZ) 陳瑋環 2015/01/26 10:30:26
Uncontrolled Exe-TO-SZ-TO-000000-HK