REV.	ECN NO OR DESCRIPTION	REVISED	DATE
A	PDR NO:C100127-5A	Harlen	2010.02.25
B	ECN NO.:S121109	YF	2014.03.27

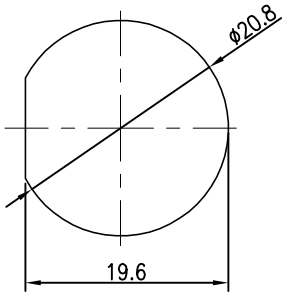

RECOMMENDED PANEL CUT-OUT

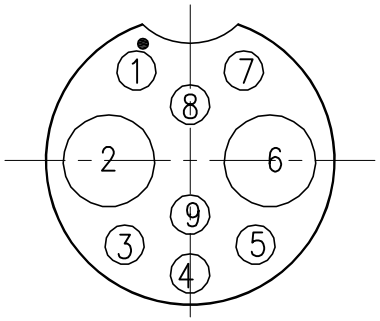

Pin Assignments
Front View

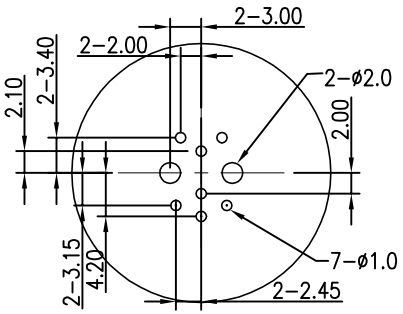

PCB Layout

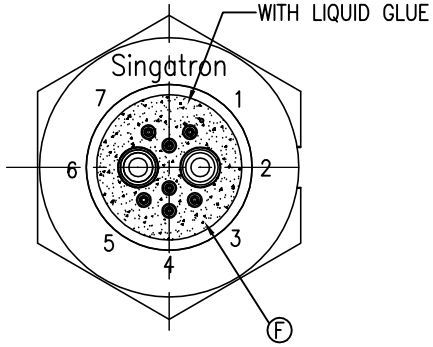

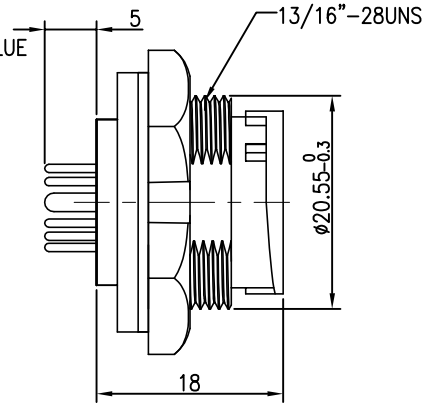

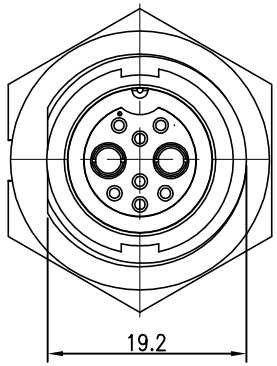

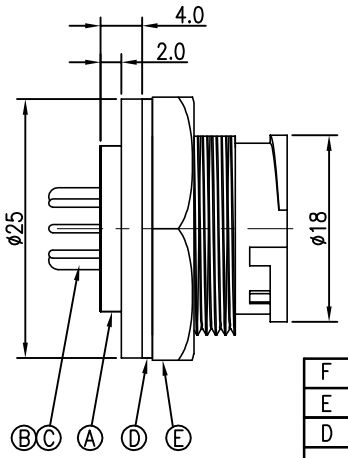

NOTES:
1. WATERPROOF RATE: IP67
   IP67: IMMERSED IN 1M WATER FOR 30 MINUTES
2. ELECTRICAL CHARACTERISTICS
   CURRENT RATING: 2+20A
   TEMPERATURE RANGE: -40°C TO +100°C
   DIELECTRIC WITHSTANDING VOLTAGE: 500V AC FOR ONE MINUTE
3. SPECIFICATIONS:SEE "CIRCULAR SERIES SPECIFICATIONS".
4. TO CONFORM TO SINGATRON HAZARDOUS SUBSTANCE FREE SPEC.
5. GREEN PRODUCT IDENTIFICATION LABEL ON PACKAGING: G.P. PASS
6. UV CYCLIC 96H 0.63W/CM² AND HOT AND COLD SHOCK 5 CYCLE TIME TESTED NON-AGING,CRACKING,ETC.
7. PASSES "EIA364-26 TEST CONDITION A" SALT SPRAY 48H.

NO	DESCRIPTION	QTY	MATERIAL	PLATING & COLOR
F	LIQUID GLUE	1	N/A	BLACK
E	NUT	1	NYLON+GF	BLACK
D	GASKET	1	EPDM	BLACK
C	FEMALE PIN	7	Phosphor Bronze	6u" GOLD PLATING OVER NICKEL PLATING
B	FEMALE PIN	2	Phosphor Bronze	1~3u" GOLD PLATING OVER NICKEL PLATING
A	BODY	1	NYLON+GF	BLACK

UNLESS OTHERWISE SPECIFED TOLERANCES

DECIMALS: X :±0.5, X.X :±0.3, X.XX :±0.2
ANGLES: X :±2°, X.X :±1°

Singatron Enterprise Co., Ltd.
信音企業股份有限公司

TITLE	CIRCULAR MIDDLE SIZE (PCB TYPE) MALE CONN. FEMALE (2+7)PIN(2+20A)		
DWN	YF	PART NO.2CM3012-W09E00	
CHKD	Harlen	SCALE 2:1	UNIT: mm
APVD	Quan	SIZE: A3	SHEET:1 OF 1 REV:B

CUSTOMER COPY

文件編號:RD-06-043-A