REV.	ECN NO OR DESCRIPTION	REVISED	DATE
A	PDR NO.:S120914-7A	JF	2012.11.19
B	ECN NO.:S170428-R	Harlen	2017.4.17
C	ECN NO.:S202009-E10	MF	2020.11.24

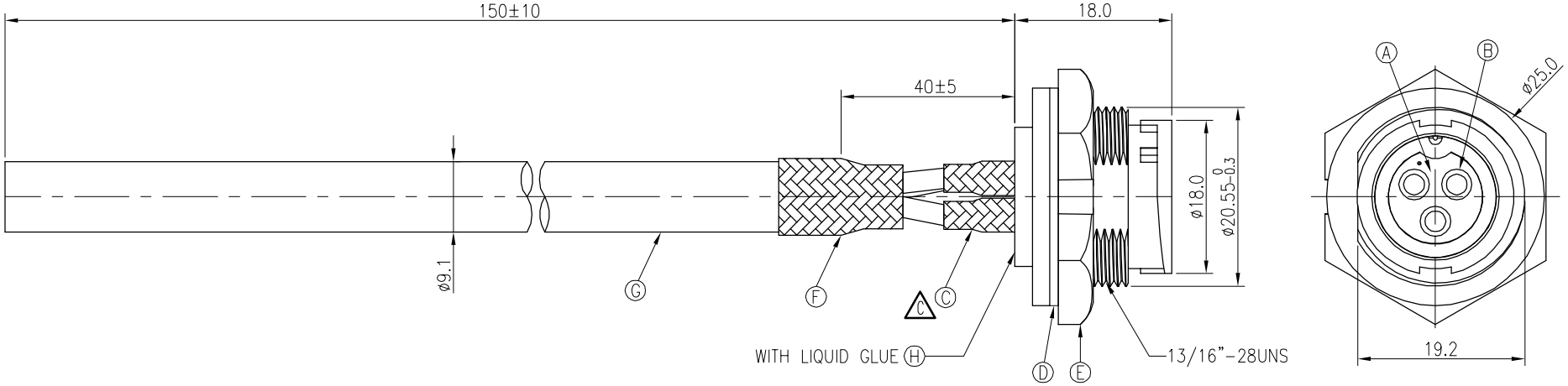

CONN.

WATERPROOF RATE: IP67

NOTES:
1. WATERPROOF RATE: IP67
   IP67: IMMERSED IN 1M WATER FOR 30 MINUTES
2. CURRENT RATING: 16A
3. SPECIFICATIONS:SEE "CIRCULAR SERIES SPECIFICATIONS".
4. TO CONFORM TO SINGATRON HAZARDOUS SUBSTANCE FREE SPEC.
5. GREEN PRODUCT IDENTIFICATION LABEL ON PACKAGING: G.P. PASS
6. FOR PANEL THICKNESS MAX OF 3.5mm

CONN.	WIRE COLOR
3	YELLOW/GREEN
2	BLUE
1	BROWN

PIN OUT

CONN.

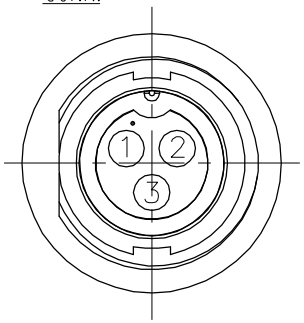

Pin Assignments
Front View

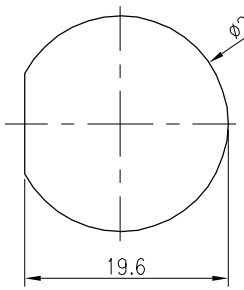

RECOMMENDED PANEL CUT-OUT

NO	DESCRIPTION	QTY	MATERIAL	PLATING & COLOR
H	LIQUID GLUE	1	N/A	BLACK
G	CABLE	1	60245 57(YZW) 3C*1.5mm ø9.1	BLACK (RUBBER JACKET)
F	HEAT SHRINK TUBE	1	125° 300V	BLACK
E	PANEL NUT	1	NYLON+GF	BLACK
D	GASKET	1	EPDM	BLACK
C	HEAT SHRINK TUBE	3	125° 300V	BLACK
B	FEMALE PIN	3	Phosphor Bronze	6u" GOLD PLATING OVER NICKEL PLATING
A	BODY	1	NYLON+GF	BLACK

UNLESS OTHERWISE SPECIFED TOLERANCES

DECIMALS: X :±0.5, X.X :±0.3, X.XX :±0.2

ANGLES: X :±2°, X.X :±1°

Suzhou Singatron Auto Electronics CO.,LTD.
蘇州信音汽車電子有限公司

TITLE	CIRCULAR MIDDLE SIZE (IP67) MALE CONN. FEMALE PIN 3 PIN(16A) LOCK TYPE			
DWN	MF	PART NO.2CM3014-W03610H		
CHKD	Cerry	SCALE 1:1	UNIT: mm	
APVD	William	SIZE: A2	SHEET:1 OF 1	REV: C

CUSTOMER COPY

文件編號 RD-06-043-A