REV	ECN NO. OR DESCRIPTION	REVISED	DATE
A	PDR NO.:T250319-3B	RZ	2025.08.08

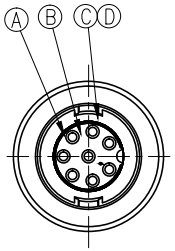

CONN.1
WATERPROOF RATE: IP67

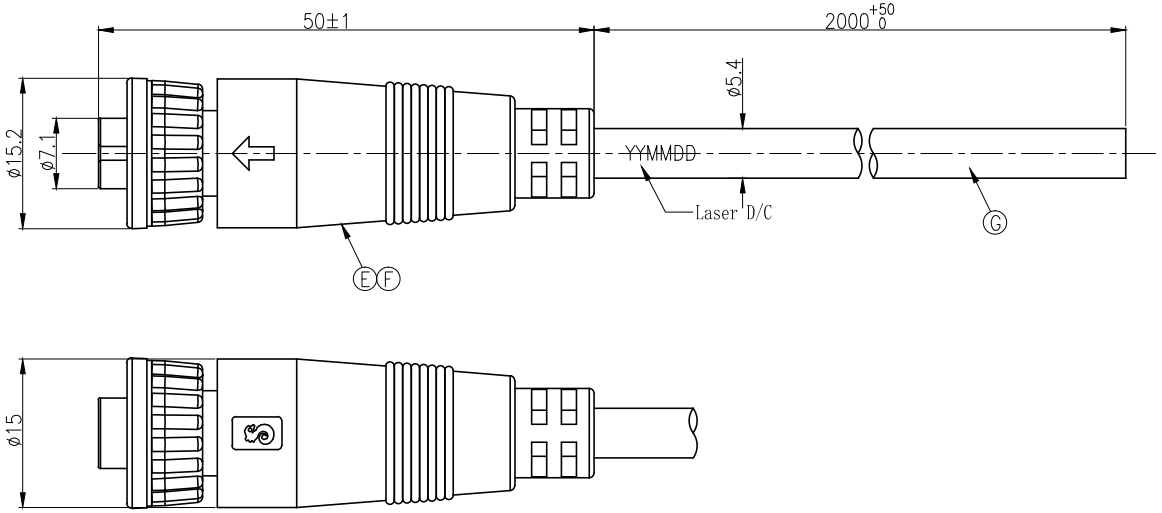

CONN.1	WIRE COLOR
8	GREEN
7	YELLOW
6	GRAY
5	RED
4	BLUE
3	WHITE
2	BROWN
1	BLACK

PIN OUT

CONN.1

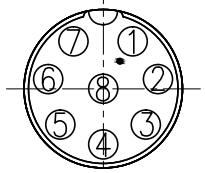

Pin Assignments
Front View

NOTES:
1. WATERPROOF DEGREE OF PROTECTION: IP67
   IP67: IMMERSED IN 1M WATER FOR 30 MINUTES
2. ELECTRICAL SPECIFICATION:
   2-1. RATED CURRENT: 2A
   2-2. RATED VOLTAGE: 60V DC
   2-3. HI-POT TEST 300V AC,0.5mA(1SEC)
   2-4. INSULATION RESISTANCE: 100MΩ Min. BY 300V DC
3. OPERATING TEMPERATURE: -20°C~+80°C
4. SPECIFICATIONS:SEE "CIRCULAR SERIES SPECIFICATIONS".
5. TO CONFORM TO SINGATRON HAZARDOUS SUBSTANCE FREE SPEC.
6. GREEN PRODUCT IDENTIFICATION LABEL ON PACKAGING: G.P. PASS

NO.	DESCRIPTION	QT'Y	MATERIAL	PLATING & COLOR
G	CABLE	1	UL2464 24AWG*8C+AL	BLACK (PVC JACKET)
F	INNER MOLD	1	TPU	NATURAL
E	OVER MOLD	1	PVC	BLACK
D	O-RING	1	SILICONE	RED
C	LOCK NUT	1	NYLON+33%GF	BLACK
B	FEMALE PIN	8	Phosphor Bronze	GOLD PLATING OVER NICKEL PLATING
A	BODY	1	NYLON+33%GF	BLACK

UNLESS OTHERWISE SPECIFED TOLERANCES

DECIMALS:
X :±0.5
X.X :±0.3
X.XX :±0.2

ANGLES:
X :±2°
X.X :±1°

SGconn Waterproof Connectors
Suzhou Singatron Auto Electronics Co.,Ltd.
蘇州信音汽車電子有限公司

TITLE	CIRCULAR MINI SIZE FEMALE CONN.			
DWN	RZ	PART NO.	2CN3004-W08204H	
CHKD	Allen	SCALE 2:1	UNIT: mm	
APVD	Liao	SIZE: A3	SHEET:1 OF 1	REV: A

CUSTOMER COPY

File No:RD-06-043-A