REV.	ECN NO OR DESCRIPTION	REVISED	DATE
D	CHANGE HIGH TEMP. MARK	EVEN	02/20'04
E	C070081,CHANGE PIN HEAD FROM FULL R TO R	ZK.CHEN	6/28'07
F	A CHANGE MATING&UNMATING FORCE SPEC. ECN NO.C070263	TANGHUI	12/18'07
G	A 料號瘦身，ECN NO.:T0900047	KENSON	8/18'09

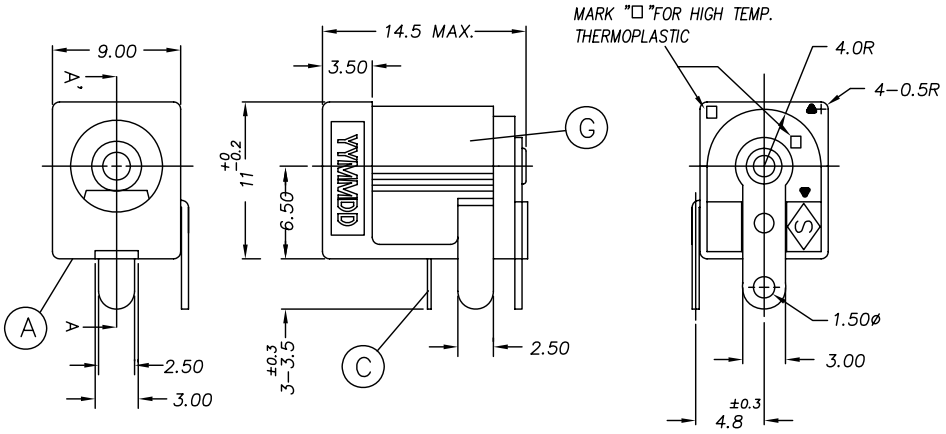

SPECIFICATIONS:
1.RATING: DC 16V 3A
A 2.INSERTION FORCE: 0.2KG-2.5KG
WITHDRAWAL FORCE: 0.2KG-3.0KG
3.INSULATION RESISTANCE BETWEEN ANY ADJACENT TERMINALS SHALL NOT BE LESS THAN 100 MEGOHMS BY 500 VOLTS MEGGER.
4.JACK SHALL WITHSTAND 250 VOLTS BETWEEN ANY ADJACENT TERMINAL FOR ONE MINUTE.
5.CONTACT RESISTANCE SHALL NOT EXCEED 0.03 OHMS.
6.JACK SHALL WITHSTAND 5,000 CYCLES OF INSERTION AND WITHDRAWAL WITH TESTING PLUG,AND CONTACT RESISTANCE SHALL NOT EXCEED 0.1 OHMS.
7.MEASURING CONDITION:
TEMPERATURE: FROM 5°C TO 35°C.
RELATIVE HUMIDITY: FROM 40% TO 85%.
8.ENVIRONMENTAL SPECIFICATIONS:
8.1 HUMIDITY TEST: HUMIDITY 90% TO 95% TEMPERATURE 40°C ± 2°C FOR 96 HOURS.
8.2 HEAT TEST: TEMPERATURE 70°C ± 2°C (HUMIDITY BELOW 50%) FOR 96 HOURS.
8.3 COLD TEST: TEMPERATURE -40°C ± 2°C FOR 96 HOURS.
9.SOLDER HEAT RESISTANCE: WAVE SOLDERING 260°C 10SECS.
10.TO CONFORM TO THE SINGATRON HSF SPECIFICATION.
11.GREEN PRODUCT IDENTIFICATION MARK IN JACK: △
12.GREEN PRODUCT IDENTIFICATION LABEL IN PACKING: G.P. PASS
13.FOR LEAD-FREE PROCESS.
14.PRINTED DATE CODE"YYMMDD " ON TOP OF CONNECTOR.

DATE CODE: YYMMDD
DD: DAY
MM: MONTH
YY: YEAR

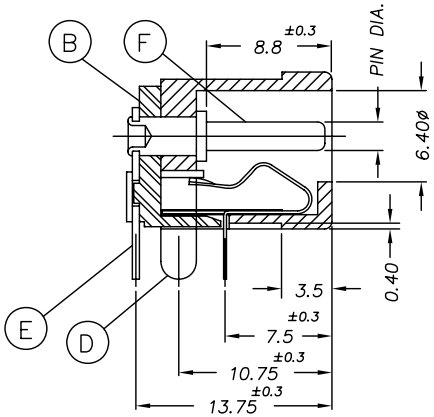

A-A' SECTION

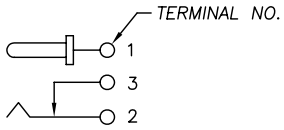

ELECTRICAL CIRCUIT

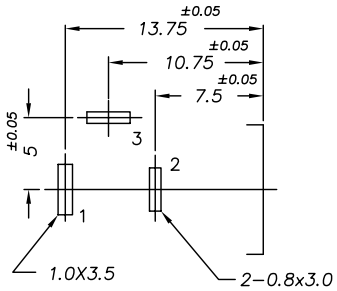

PC BOARD LAYOUT
(TOP VIEW)

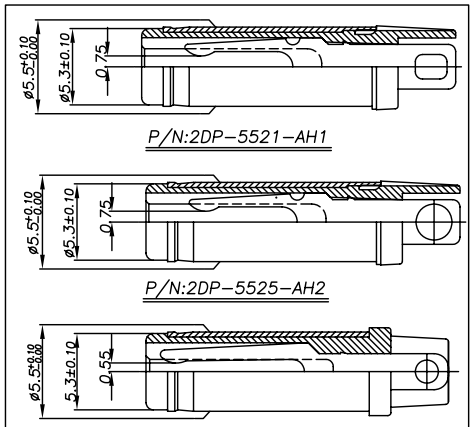

MATING PLUG(REF ONLY)

2DC-0005-□ 04 (G)

PART NO.	PIN DIA.	PLUG NO.
C	2.35ø +0 -0.1	2DP-5525-AH2
D	2.0ø +0 -0.1	2DP-5521-AH1
F	1.87ø +0 -0.1	2DP-5521-AH1
G	1.45ø +0 -0.1	2DP-5517-AH2

NO	DESCRIPTION	QTY	MATERIAL	PLATING&COLOR
F	PIN	1	BRASS	Ni60u"MIN,Cu80u"MIN
E	TERMINAL	1	COPPER ALLOY,0.5T	Ag20u"MIN,Ni20u"MIN
D	SHUNT TERMINAL	1	COPPER ALLOY,0.5T	Ag20u"MIN,Ni20u"MIN
C	TIP SPRING	1	COPPER ALLOY,0.25T	Ag20u"MIN,Ni20u"MIN
B	COVER	1	HI-TEMP THERMAL PLASTIC,UL94V-0	BLACK COLOR
A	BODY	1	HI-TEMP THERMAL PLASTIC,UL94V-0	BLACK COLOR

UNLESS OTHERWISE SPECIFED TOLERANCES

DECIMALS: X :±0.5, X.X :±0.3, X.XX :±0.2
ANGLES: X :±2°, X.X :±1°

Singatron Electronic(Chung-Shan) Co., Ltd.
信音電子(中山)有限公司

TITEL	DC POWER JACK			
DWN	KENSON 8/18'09	PART NO.2DC-0005-X04		
CHKD	HARVEY 8/18'09	SCALE: N/A	UNIT: mm	
APVD	ROBIN 8/18'09	SIZE: A3	SHEET: 1OF1	REV: G

CUSTOMER COPY

文件編號:RD-06-035-2A