REV.	ECN NO OR DESCRIPTION	REVISED	DATE
A	PDR NO.T090810-1A 應PDR要求新增一規格	許海華	9/28'09

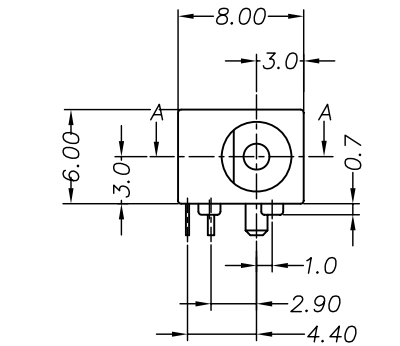

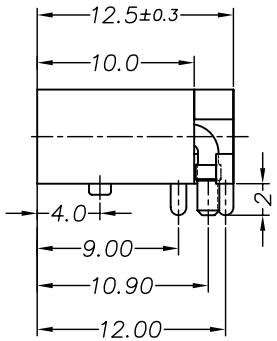

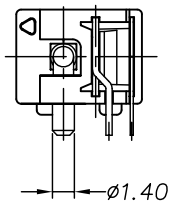

NOTE:
1.RATING: DC 30V 2.5A
2.DETAIL SPEC SEE " DC POWER JACK SPECIFICATIONS "
3. TO CONFORM TO SINGATRON HAZARDOUS SUBSTANCE FREE SPEC.
4.GREEN PRODUCT IDENTIFICATION MARK ON JACK:
5.GREEN PRODUCT IDENTIFICATION LABEL ON PACKING: G.P. PASS
6.IR FOLLOW CHART PEAK TEMPERATURE 260°±5 10SEC.

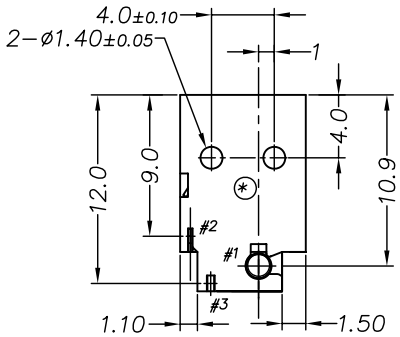

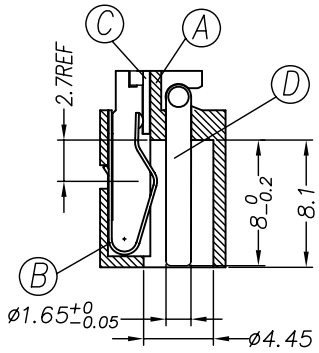

A-A SECTION

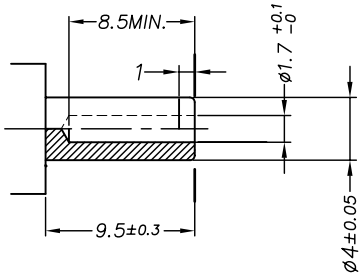

MATE PLUG

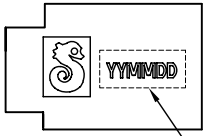

DATE CODE

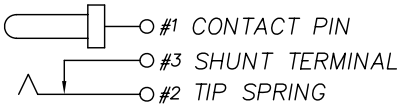

CIRCUIT

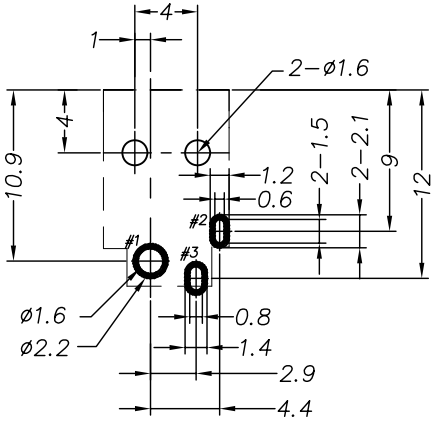

RECOMMENDED P.C.B LAYOUT
TOP VIEW (TOLERANCE: ±0.05)

NO	DESCRIPTION	QTY	MATERIAL	PLATING & COLOR
D	CONTACT PIN	1	COOPER ALLOY	Ni60u"MIN,
C	SHUNT TERMINAL	1	COOPER ALLOY 0.4t	Ag20u"MIN,Ni20u"MIN
B	TIP SPRING	1	COPPER ALLOY 0.2t	Ag20u"MIN,Ni20u"MIN
A	BODY	1	HIGH TEMP.THERMOPLASTIC,UL94V-0	YELLOW COLOR(1225C)

UNLESS OTHERWISE SPECIFED TOLERANCES

DECIMALS: X :±0.5, X.X :±0.3, X.XX :±0.2
ANGLES: X :±2°, X.X :±1°

Singatron Enterprise Co., Ltd.
信音企業股份有限公司

TITLE	DC POWER JACK		
DWN	HAIHUA 9/28'09	PART NO. 2DC-0018-009	
CHKD		SCALE 3:1	UNIT: mm
APVD	ROBIN 9/28'09	SIZE: A4	SHEET: 1OF1

REV: A

CUSTOMER COPY

文件編號:RD-06-043-A