REV.	ECN NO OR DESCRIPTION	REVISED	DATE
A	PRODUCT RELEASE	ZLS	2014.4.1

DATE CODE
YY:Year(02)
MM:Month(01~12)
DD:Day(01~31)

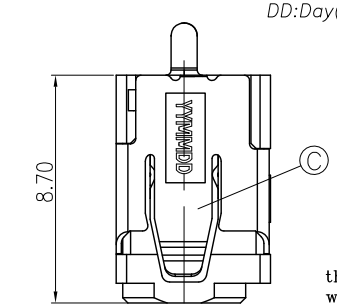

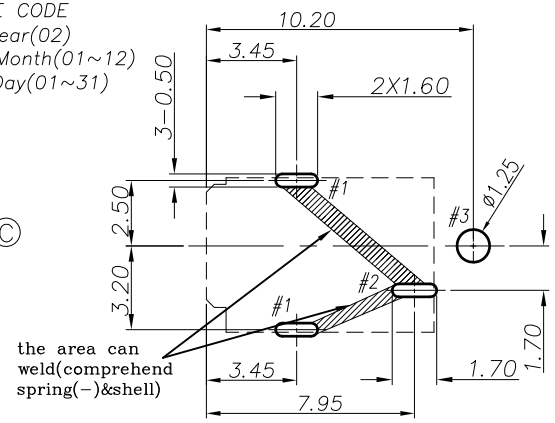

RECOMMENDED PCB LAYOUT

TOP VIEW(TOLERANCE: ±0.05)

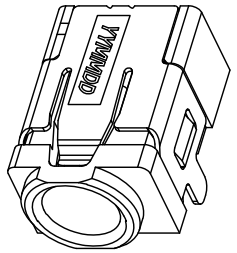

SPECIFICATIONS:

1. INSERTION FORCE: 0.6KG~2.0KG
   WITHDRAWAL FORCE: 0.4KG~2.0KG
2. INSULATION RESISTANCE BETWEEN ANY ADJACENT TERMINALS SHALL NOT BE LESS THAN 100 MEGOHMS BY 500 VOLTS MEGGER.
3. JACK SHALL WITHSTAND 500 VOLTS BETWEEN ANY ADJACENT TERMINAL FOR ONE MINUTE.
4. CONTACT RESISTANCE SHALL NOT EXCEED 30mΩ
5. JACK SHALL WITHSTAND 10000 CYCLES OF INSERTION AND WITHDRAWAL WITH TESTING PLUG,AND CONTACT RESISTANCE SHALL NOT EXCEED 60mΩ
6. ENVIRONMENTAL SPECIFICATIONS:
   6.1 HUMIDITY TEST: HUMIDITY 90% TO 95% TEMPERATURE 40°C ±2°C FOR 96 HOURS.
   6.2 HEAT TEST: TEMPERATURE 70°C ± 2°C (HUMIDITY BELOW 50%) FOR 96 HOURS.
   6.3 COLD TEST: TEMPERATURE −40°C ± 2°C FOR 96 HOURS.
7. OTHER SPEC TO REFER 2DC-0053 SERIES SPEC.
8. PACKING: TAPE & REEL
9. RATING:DC 19V 3A DEPAND ON MATING
10. TO CONFORM TO SINGATRON HAZARDOUS SUBSTANCE FREE SPEC.
11. HALOGEN FREE PRODUCT IDENTIFICATION MARK ON PRODUCT:
12. HALOGEN FREE PRODUCT IDENTIFICATION LABEL ON PACKAGING:

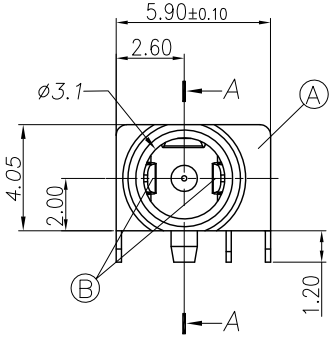

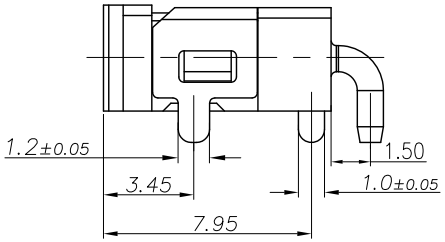

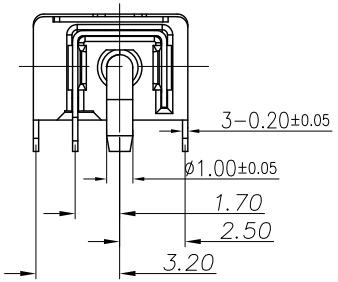

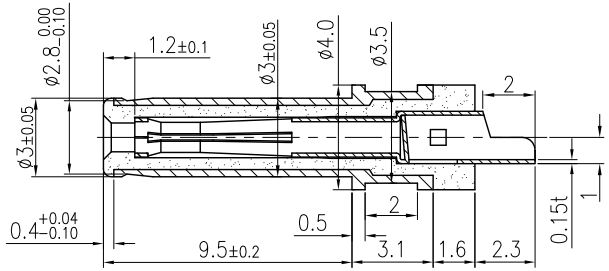

ø3.0 PULG TYPE(2DP-0053-K02)

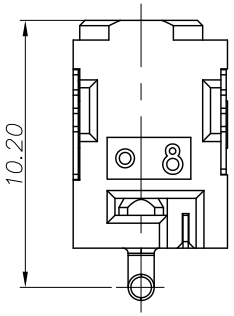

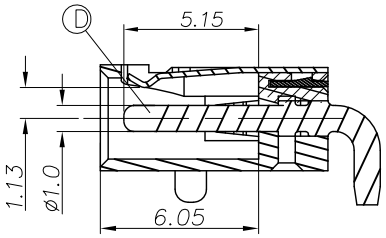

Section A-A

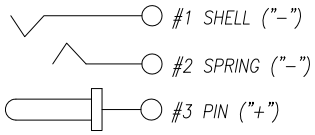

ELECTRICAL CIRCUIT

NO	DESCRIPTION	QTY	MATERIAL	PLATING & COLOR
D	PIN	1	BRASS BAR	GOLD FLASH
C	SHELL	1	COPPER ALLOY 0.2t	GOLD FLASH
B	SPRING	1	COPPER ALLOY 0.2t	GOLD FLASH ON CONTACT AREA AND SOLDER AREA ,OVER Ni 60u"
A	BODY	1	PA10T+30%GF UL94V-0	BLACK

UNLESS OTHERWISE SPECIFED TOLERANCES

DECIMALS:
X :±0.5
X.X :±0.3
X.XX :±0.2

ANGLES:
X :±2°
X.X :±1°

Singatron Enterprise Co., Ltd.
信音企業股份有限公司

TITLE	DC JACK			
DWN	ZLS 14/4/10	PART NO. 2DC-0053-K27F		
CHKD	ZJZ 14/4/10	SCALE 5:1	UNIT: mm	
APVD	Liao 14/4/10	SIZE: A3	SHEET: 10F1	REV: A

CUSTOMER COPY

文件編號 RD-06-043-A