REV.	ECN NO OR DESCRIPTION	REVISED	DATE
C	C070081,CHANGE PIN HEAD FROM FULL R TO R	HAIHUA	6/27'07
D	ADD GREEN PRODUCT IDENTIFICATION MARK	KENSON	8/18'09

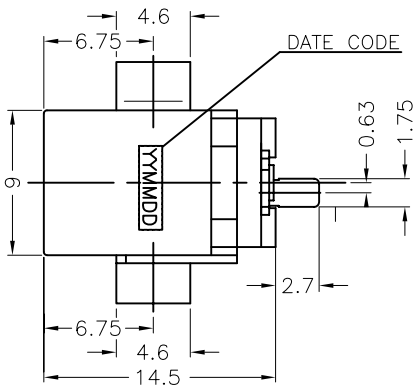

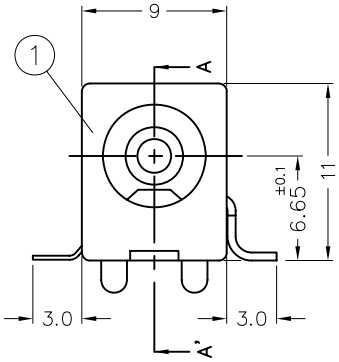

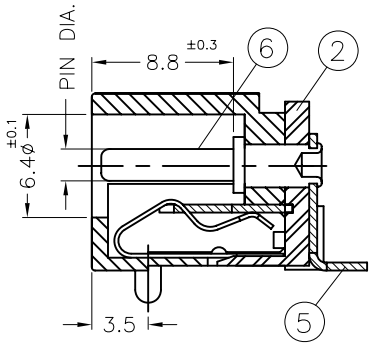

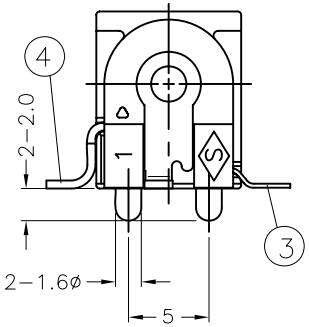

SPECIFICATIONS:
1.RATING: DC 14V 3.9A
2.INSERTION FORCE: 0.2KG-2KG
WITHDRAWAL FORCE: 0.2KG-1.5KG
3.INSULATION RESISTANCE BETWEEN ANY ADJACENT TERMINALS SHALL NOT BE LESS THAN 100 MEGOHMS BY 500 VOLTS MEGGER.
4.JACK SHALL WITHSTAND 250 VOLTS BETWEEN ANY ADJACENT TERMINAL FOR ONE MINUTE.
5.CONTACT RESISTANCE SHALL NOT EXCEED 0.03 OHMS.
6.JACK SHALL WITHSTAND 5,000 CYCLES OF INSERTION AND WITHDRAWAL WITH TESTING PLUG,AND CONTACT RESISTANCE SHALL NOT EXCEED 0.1 OHMS.
7.MEASURING CONDITION:
TEMPERATURE: FROM 5°C TO 35°C.
RELATIVE HUMIDITY: FROM 40% TO 85%.
8.ENVIRONMENTAL SPECIFICATIONS:
8.1 HUMIDITY TEST: HUMIDITY 90% TO 95% TEMPERATURE 40°C ± 2°C FOR 96 HOURS.
8.2 HEAT TEST: TEMPERATURE 70°C ± 2°C (HUMIDITY BELOW 50%) FOR 96 HOURS.
8.3 COLD TEST: TEMPERATURE -40°C ± 2°C FOR 96 HOURS.
9.UNLESS OTHERWISE SPECIFICED TOLERANCE ARE: ±0.2
10.PACKAGE: TAPING REEL.
11. TO CONFORM TO THE SINGATRON HSF SPECIFICATION.
12. GREEN PRODUCT IDENTIFICATION MARK ON JACK: △
13. GREEN PRODUCT IDENTIFICATION LABEL ON PACKING: G.P. PASS
14. DATE CODE DESCRIPTION:

YY MM DD
DAY
MONTH
YEAR

2DC-0415-□ 03

PART NO.	PIN DIA.
B	2.5ø $^{+0}_{-0.1}$
C	2.35ø $^{+0}_{-0.1}$
D	2.0ø $^{+0}_{-0.1}$
F	1.87ø $^{+0}_{-0.1}$
G	1.45ø $^{+0}_{-0.1}$

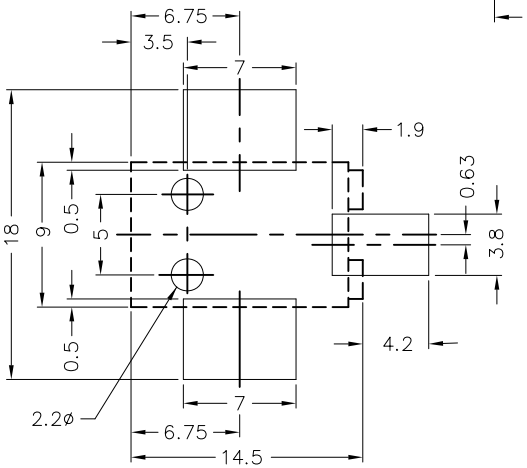

RECOMMEND MOUNTING PADS
(TOP VIEW)

NO	DESCRIPTION	QTY	MATERIAL	PLATING&COLOR
6	PIN	1	BRASS BAR	NICKEL PLATING
5	TERMINAL	1	BRASS 0.5t	SILVER PLATING
4	SHUNT TERMINAL	1	BRASS 0.5t	SILVER PLATING
3	TIP SPRING	1	PHOSPHOR BRONZE 0.25t	SILVER PLATING
2	COVER	1	HIGH TEMP. THERMOPLASTIC BLACK COLOR	BLACK COLOR
1	BODY	1	HIGH TEMP. THERMOPLASTIC BLACK COLOR	BLACK COLOR

UNLESS OTHERWISE SPECIFED TOLERANCES

DECIMALS: X :±0.5, X.X :±0.3, X.XX :±0.2
ANGLES: X :±2°, X.X :±1°

Singatron Electronic(Chung-Shan) Co., Ltd.
信音電子(中山)有限公司

TITEL	D.C. POWER JACK			
DWN	KENSON 8/18'09	PART NO.	2DC-0415-□ 03	
CHKD	HARVEY	SCALE: N/A	UNIT: mm	
APVD	ROBIN	SIZE: A3	SHEET: 10F1	REV: D

CUSTOMER COPY

文件編號:RD-06-035-2A