REV.	ECN NO OR DESCRIPTION	REVISED	DATE
F	F 料號瘦身，ECN NO.:T0900047	KENSON	8/20'09

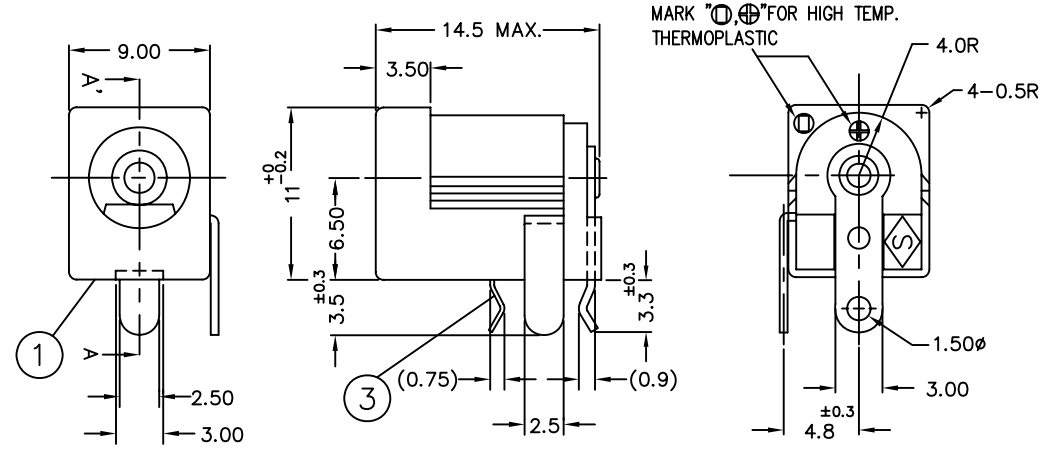

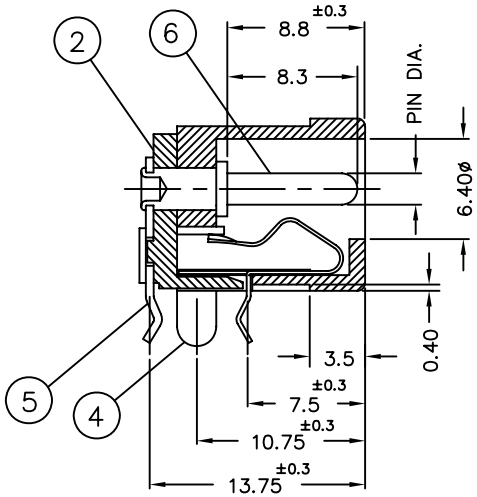

A-A' SECTION

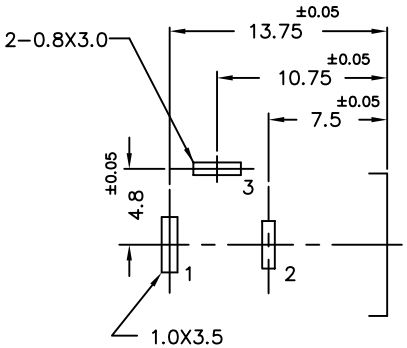

PC BOARD LAYOUT
(TOP VIEW)

2DC-0525 □ 2A5 (F)

PART NO.	PIN DIA.
D	2.0ø +0 -0.1
G	1.45ø +0 -0.1

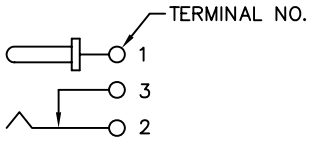

ELECTRICAL CIRCUIT

SPECIFICATIONS:

1. RATING: DC 16V 3A
2. INSERTION FORCE: 0.2KG-2KG
   WITHDRAWAL FORCE: 0.2KG-1.5KG
3. INSULATION RESISTANCE BETWEEN ANY ADJACENT TERMINALS SHALL NOT BE LESS THAN 100 MEGOHMS BY 500 VOLTS MEGGER.
4. JACK SHALL WITHSTAND 250 VOLTS BETWEEN ANY ADJACENT TERMINAL FOR ONE MINUTE.
5. CONTACT RESISTANCE SHALL NOT EXCEED 0.03 OHMS.
6. JACK SHALL WITHSTAND 5,000 CYCLES OF INSERTION AND WITHDRAWAL WITH TESTING PLUG,AND CONTACT RESISTANCE SHALL NOT EXCEED 0.1 OHMS.
7. MEASURING CONDITION:
   TEMPERATURE: FROM 5°C TO 35°C.
   RELATIVE HUMIDITY: FROM 40% TO 85%.
8. ENVIRONMENTAL SPECIFICATIONS:
   8.1 HUMIDITY TEST: HUMIDITY 90% TO 95% TEMPERATURE 40°C ± 2°C FOR 96 HOURS.
   8.2 HEAT TEST: TEMPERATURE 70°C ± 2°C (HUMIDITY BELOW 50%) FOR 96 HOURS.
   8.3 COLD TEST: TEMPERATURE -40°C ± 2°C FOR 96 HOURS.

NO	DESCRIPTION	QTY	MATERIAL	PLATING & COLOR
6	PIN	1	BRASS BAR	NICKEL PLATING
5	TERMINAL	1	BRASS 0.5t	SILVER PLATING
4	SHUNT TERMINAL	1	BRASS 0.5t	SILVER PLATING
3	TIP SPRING	1	PHOSPHOR BRONZE 0.25t	SILVER PLATING
2	COVER	1	HIGH TEMP. UL 94V-0 THERMOPLASTIC	BLACK COLOR
1	BODY	1	HIGH TEMP. UL 94V-0 THERMOPLASTIC	BLACK COLOR

UNLESS OTHERWISE SPECIFED TOLERANCES

DECIMALS: X :±0.5, X.X :±0.3, X.XX :±0.2
ANGLES: X :±2°, X.X :±1°

Singatron Electronic(Chung-Shan) Co., Ltd.
信音電子(中山)有限公司

TITEL	DC POWER JACK		
DWN	KENSON 8/20'09	PART NO. 2DC-0525□ 2A5	
CHKD	HARVEY 8/20'09	SCALE: 3/1	UNIT: mm
APVD	ROBIN 8/20'09	SIZE: A4	SHEET: 10F1	REV: F

CUSTOMER COPY

文件編號:RD-06-035-2A