DIMENSIONS RANGE	TOLERANGE UNLESS SPECIFIED
0.5≤X<1	±0.1
1≤X≤6	±0.15
6<X≤18	±0.2
18<X≤50	±0.3

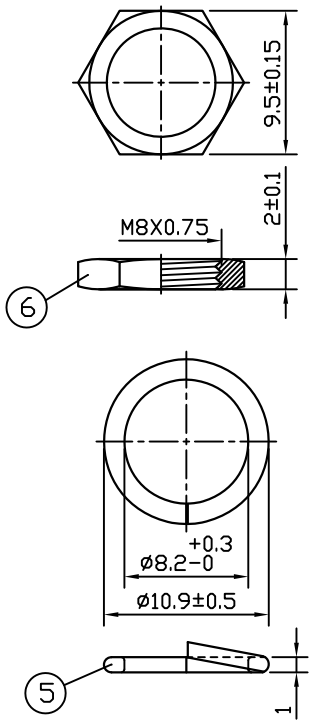

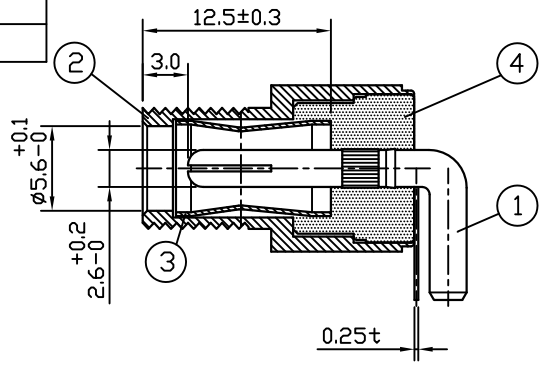

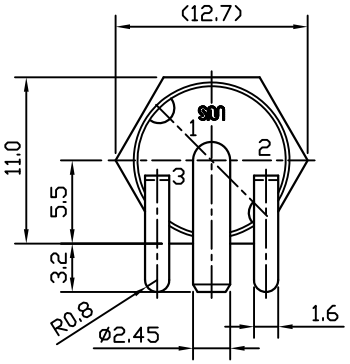

REAR VIEW

PIN 組立：159-065
Follow RoHs Standard
1.Dielectric strength:AC 500V/1 minute.
2.Insulation resistance:100MΩ or over.(DC 500V)
3.Contact resistance:30mΩ or less.
4 4.Insertion force:3.5Kg Max
Extraction force:0.3~3Kg.

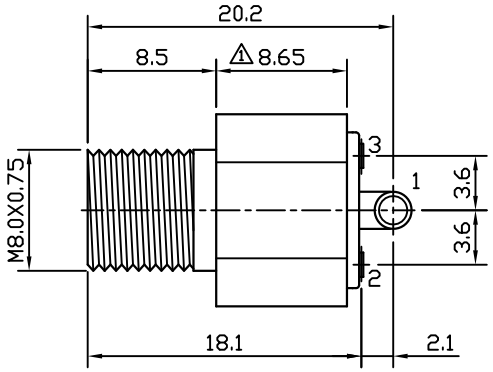

BOTTOM VIEW

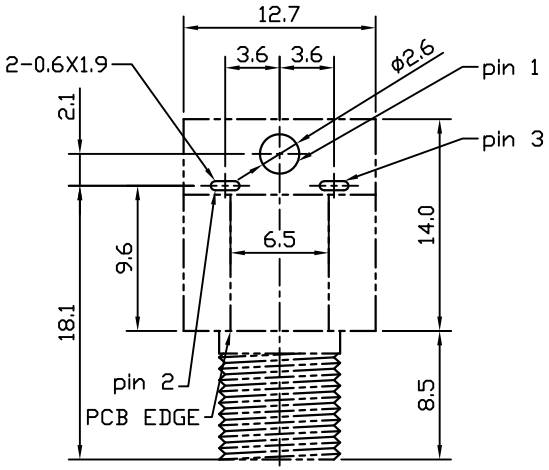

TOP VIEW

PCB LAYOUT

5 增加螺帽，墊圈圖	2016.08.19	CHIEN
4 增加備註	2012.03.08	CHIEN
3 C3604→SWRH62	2010.02.24	CHIEN
2 設變 172-014	2006.12.08	CHIEN
1 9.0-->8.65	2006.12.06	CHIEN
DESCRIPTION	DATE	REVISED

ITEM	DRAWING NUMBER	PART NAME	MATERIAL	PLATED	Q'TY
6	119-135	NUT	BRASS	NI	1
3 5	179-008	WASHER	SWRH62	NI	1
4	190-089	DIELECTRIC	PBT		1
3	170-236	Terminal	Phosphor Bronze	AG	1
2	119-132	SLEEVE	BRASS	NI	1
2 1	172-014	PIN	Phosphor Bronze	AG	1

Singatron Enterprise Co., Ltd.

TITLE	5.5X2.5DC JACK (DJ5525S1)		
DWN	CHIEN	PART NO. 2DC-655-125	
CHKD	2016.08.19	SCALE 1:1	UNIT: mm
APVD		SIZE: A3	SHEET:1 OF 1 REV: 4

CUSTOMER COPY

文件編號 RD-06-043-A