REV.	ECN NO. OR DESCRIPTION	REVISED	DATE
A	ECN NO. S100837	Swina	2010.09.01
B	ECN NO. S121137	SEAN	2013.01.09

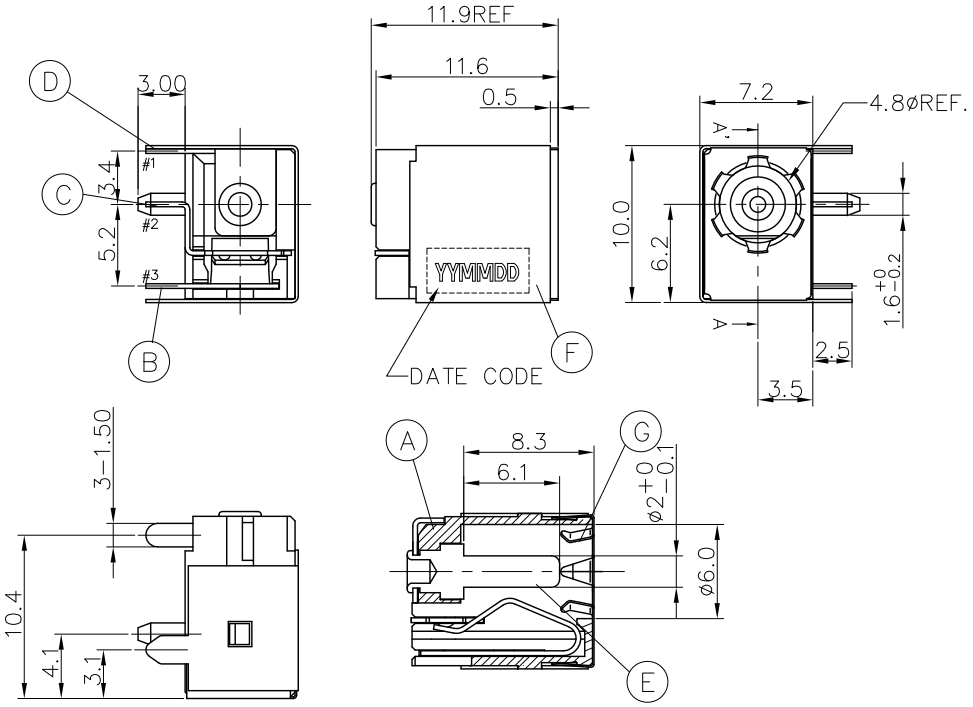

SPECIFICATIONS:

1. RATING: DC 20V 7A
2. LOAD SIDE CAPACITANCE: 4.7μF*4 MIN.
3. INSERTION FORCE: 0.4KG–3.0KG
   WITHDRAWAL FORCE: 0.4KG–3.0KG
4. INSULATION RESISTANCE BETWEEN ANY ADJACENT TERMINALS SHALL NOT BE LESS THAN 100 MEGOHMS BY 500 VOLTS MEGGER.
5. JACK SHALL WITHSTAND 250 VOLTS BETWEEN ANY ADJACENT TERMINAL FOR ONE MINUTE.
6. CONTACT RESISTANCE SHALL NOT EXCEED 0.03 OHMS.
7. JACK SHALL WITHSTAND 5,000 CYCLES OF INSERTION AND WITHDRAWAL WITH TESTING PLUG,AND CONTACT RESISTANCE SHALL NOT EXCEED 0.1 OHMS.
8. MEASURING CONDITION:
   TEMPERATURE: FROM 5°C TO 35°C.
   RELATIVE HUMIDITY: FROM 40% TO 85%
9. ENVIRONMENTAL SPECIFICATIONS:
   9.1 HUMIDITY TEST: HUMIDITY 90% TO 95% TEMPERATURE 40°C ± 2°C FOR 96 HOURS.
   9.2 HEAT TEST: TEMPERATURE 70°C ± 2°C (HUMIDITY BELOW 50%) FOR 96 HOURS.
   9.3 COLD TEST: TEMPERATURE –40°C ± 2°C FOR 96 HOURS.
10. SOLDERABILITY TEST: THE TERMINATION IS AT LEAST 95% COVERED BY A CONTINUOUS NEW SOLDER COATING.
    TEST CONDITION: DIP IN MOLTEN SOLDER FOR 5 Sec. AT 245±5°C
    (TERMINATION SHALL BE IMMERSED IN FLUX BEFORE TEST)
11. PACKAGING: TAPE & REEL.
12. SOLDERING CONDITION: WAVE SOLDERING.
13. TO CONFORM TO SINGATRON HAZARDOUS SUBSTANCE FREE SPEC.
14. GREEN PRODUCT IDENTIFICATION MARK ON JACK:
15. GREEN PRODUCT IDENTIFICATION LABEL ON PACKING: **G.P. PASS**
16. FOR LEAD–FREE PROCESS.

SCHEMATIC

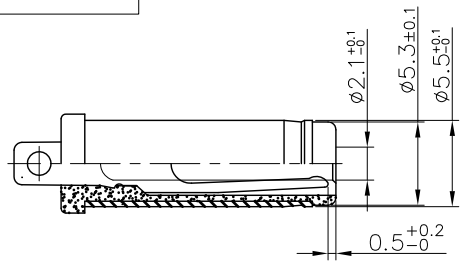

MATING PLUG

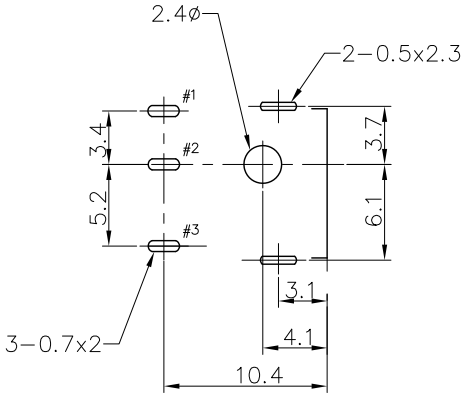

RECOMMENDED P.C.B LAYOUT
TOP VIEW (TOLERANCE: ±0.05)

NO	DESCRIPTION	QTY	MATERIAL	PLATING & COLOR
G	GROUNDING SPRING	1	STAINLESS 0.1t	N/A
F	SHIELDING	1	BRASS STRIP 0.2t	Ni 60u" Min
E	PIN	1	BRASS BAR	Ni 60u" Min
D	TERMINAL	1	BRASS STRIP 0.3t	Ni 60u" Min
C	SHUNT TERMINAL	1	BRASS STRIP 0.3t	Ag 20u" Over Ni20u"
B	TIP SPRING	1	YCUTM–H 0.3T	Ag 20u" Over Ni20u"
A	BODY	1	HIGH TEMP. THERMOPLASTIC UL 94V–0	BLACK

UNLESS OTHERWISE SPECIFED TOLERANCES

DECIMALS: X :±0.5, X.X :±0.3, X.XX :±0.2
ANGLES: X :±2°, X.X :±1°

Singatron Enterprise Co., Ltd.
信音企業股份有限公司

TITLE	DC POWER JACK		
DWN	SEAN	PART NO. 2DC-G026D201	
CHKD	TOM	SCALE:N/A	UNIT: mm
APVD	MAX	SIZE: A3	SHEET: 1 OF 1
			REV: B

CUSTOMER COPY

文件編號 RD-06-043-A