REV.	ECN NO OR DESCRIPTION	REVISED	DATE
A	PRODUCT RELEASE	DA	2006.03.10
B	ECN NO.950124	POCA	2006.05.13

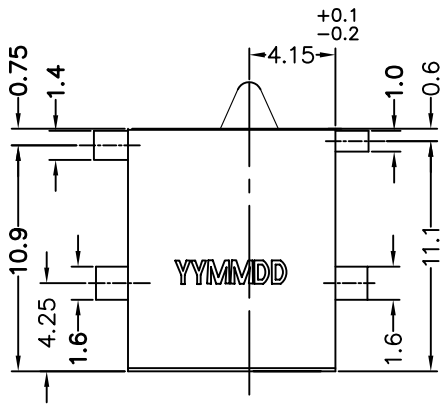

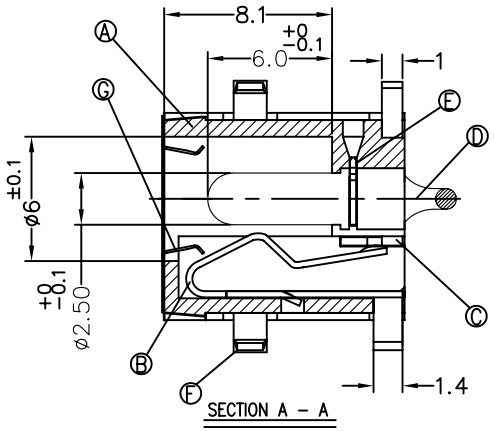

SECTION A – A

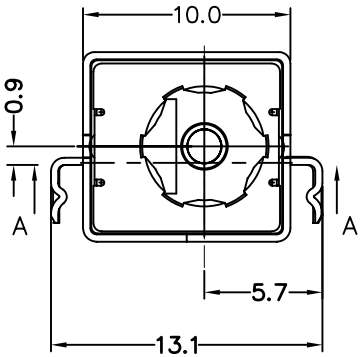

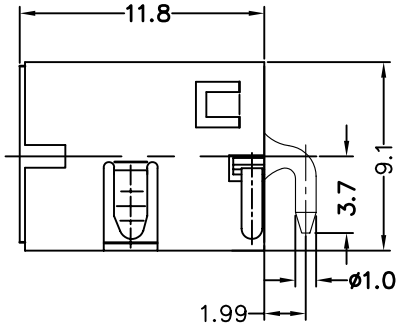

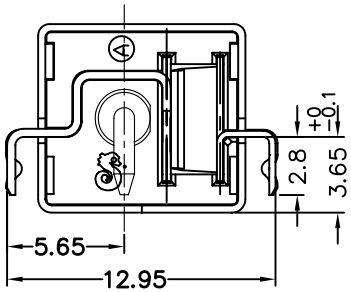

SPECIFICATIONS:
1.RATING: DC 20V 7A
2.INSERTION FORCE: 2.5Kg MAX.
WITHDRAWAL FORCE: 1.0Kg~2.5Kg
3.INSULATION RESISTANCE BETWEEN ANY ADJACENT TERMINALS SHALL NOT BE LESS THAN 100 MEGOHMS BY 500 VOLTS MEGGER.
4.JACK SHALL WITHSTAND 500 VOLTS BETWEEN ANY ADJACENT TERMINAL FOR ONE MINUTE.
5.CONTACT RESISTANCE SHALL NOT EXCEED 0.03 OHMS.
6.JACK SHALL WITHSTAND 5,000 CYCLES OF INSERTION AND WITHDRAWAL WITH TESTING PLUG, AND CONTACT RESISTANCE SHALL NOT EXCEED 0.06 OHMS.
7.MEASURING CONDITION:
TEMPERATURE: FROM 5°C TO 35°C.
RELATIVE HUMIDITY: FROM 40% TO 85%.
8.TO CONFORM TO THE "SE-01-001" & "ROHS DIRECTIVE"
9.GREEN PRODUCT IDENTIFICATION LABEL IN PACKING: **G.P. PASS**
10. FOR LEAD-FREE PRODUCT.
11.PACKING: TAPE&REEL
12.PRINTED DATE CODE "YYMMDD" ON TOP OF CONNECTOR.

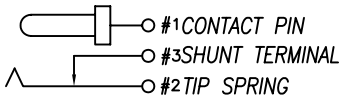

CIRCUIT

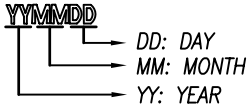

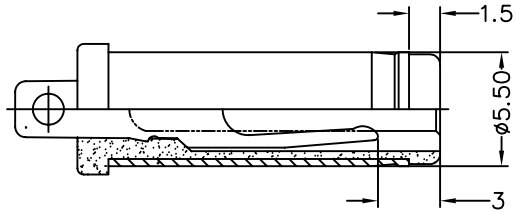

MATE PLUG ø5.50

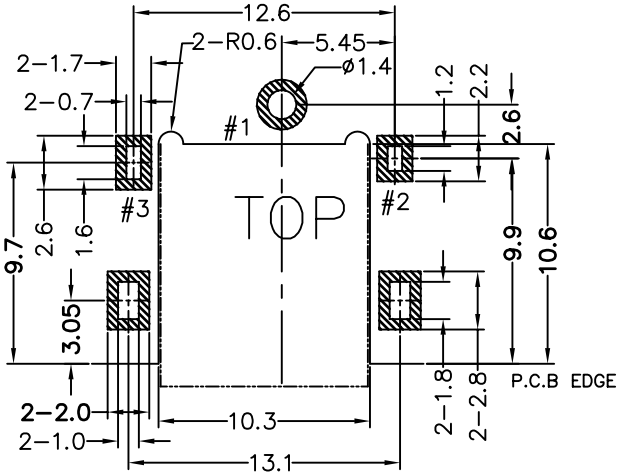

RECOMMENDED P.C.B LAYOUT
TOP VIEW (TOLERANCES:±0.05)

NO	DESCRIPTION	QTY	MATERIAL	PLATING & COLOR
G	GROUND	1	SUS 0.1t	
F	SHIELD	1	BRASS 0.35t	TIN PLATING
E	TERMINAL	1	SUS 0.3t	
D	CONTACT PIN	1	BRASS BAR	SILVER PLATING
C	SHUNT TERMINAL	1	BRASS 0.4t	SILVER PLATING
B	TIP SPRING	1	COPPER ALLOY 0.3t	SILVER PLATING
A	BODY	1	HIGHT TEMP.THERMOPLASTIC UL94V-0	BLACK COLOR

UNLESS OTHERWISE SPECIFED TOLERANCES

DECIMALS: X :±0.5, X.X :±0.3, X.XX :±0.2
ANGLES: X :±2°, X.X :±1°

Singatron Enterprise Co., Ltd.
信音企業股份有限公司

TITLE	DC POWER JACK		
DWN	POCA 2006.7.17	PART NO. 2DC-G028-B01	
CHKD	DA 2006.7.18	SCALE: 4/1	UNIT: mm
APVD	POCA 2006.7.18	SIZE: A3	SHEET: 1 OF 1	REV: B

CUSTOMER COPY

文件編號:RD-06-035-1A