REV.	ECN NO OR DESCRIPTION	REVISED	DATE
A	PDR NO. T150109-6A	Springwu	2015.04.01
B	ECN NO. S150941-E	YUREN	2015.12.11
C	ECN NO. S181020-R	Jie	2018.10.22

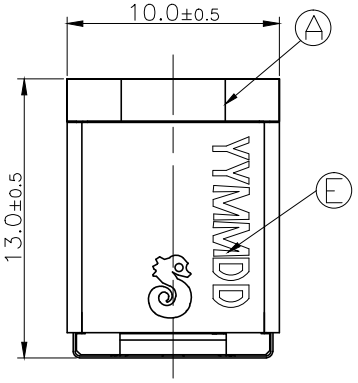

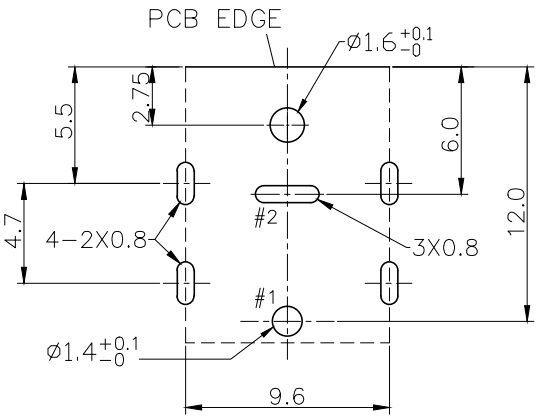

RECOMMEND P.C.B LAYOUT

TOP VIEW(TOLERANCE ±0.05)

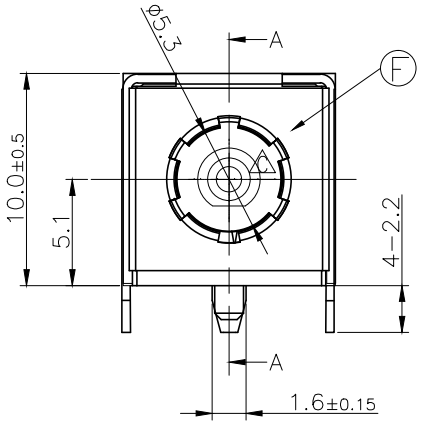

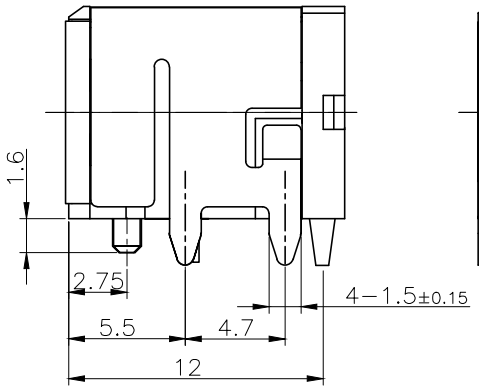

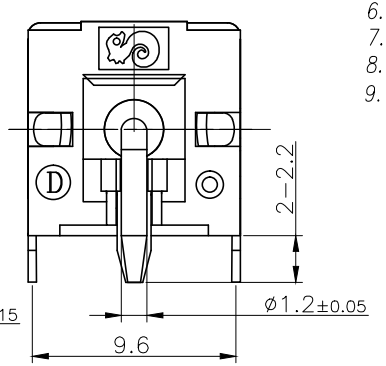

SPECIFICATIONS:

1. ELECTRICAL CHARACTERISTICS:
   1-1. RATING: 20V 10A.
   1-2. CONTACT RESISTANCE: 10mΩ MAX.
   1-3. DIELECTRIC WITHSTANDING VOLTAGE: 500V AC FOR ONE MINUTE.
   1-4. INSULATION RESISTANCE: 100MΩ MIN. MEASURED BY 500 VDC
2. MECHANICAL CHARACTERISTICS:
   2-1. INSERTION FORCE : 3.5 kg Max.
   2-2. WITHDRAWAL FORCE : 0.5~3.5kg.
3. LIFE TEST: 8,000 CYCLES MIN.
4. TO CONFORM TO SINGATRON HAZARDOUS SUBSTANCE FREE SPEC.
5. PRINTED DATE CODE " YYMMDD " ON TOP OF CONNECTOR.
   - DD: DAY
   - MM: MONTH
   - YY: YEAR
6. HALOGEN FREE PRODUCT IDENTIFICATION MARK ON JACK:
7. HALOGEN FREE PRODUCT IDENTIFICATION LABEL ON PACKAGING:
8. FOR WAVE SOLDERING LEAD-FREE PROCESS.
9. THE PANEL'S ID MUST BE GREATER THAN THE PLUG'S OD WHICH MUST HAVE A DIFFERENCE OF LESS THAN OR EQUAL TO 0.5 mm.(AS SHOWN IN FIGURE 1.)

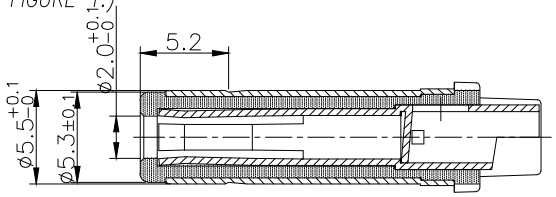

MATING PLUG

(TOLERANCE: ±0.05)

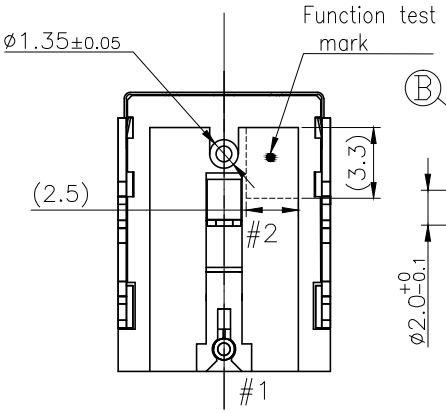

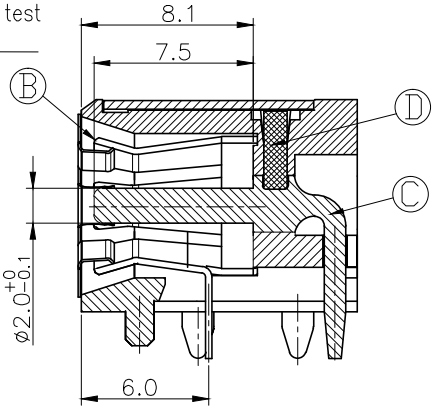

SECTION A-A

SCHEMATIC

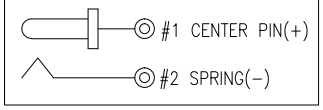

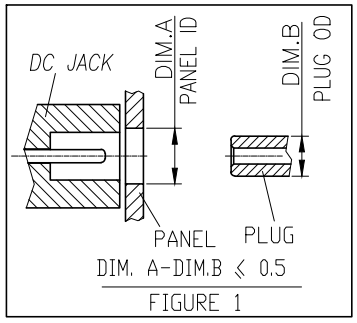

FIGURE 1

NO	DESCRIPTION	QTY	MATERIAL	PLATING & COLOR
F	GROUND	1	STAINLESS STEEL 0.15T	N/A
E	SHELL	1	SPCC 0.4T	Ni 60u" Mim,Cu 80u"Min
D	STOPPER	1	HIGH TEMP.THERMOPLASTIC UL94V-0	NATURE
C	PIN	1	BRASS	Ag 20u" OVER Ni 60u".
B	SPRING	1	PHOSPHOR BRONZE 0.3T	Sn 60u"Min,Ni 60u"Min.
A	BODY	1	HIGH TEMP.THERMOPLASTIC UL94V-0	BLACK

UNLESS OTHERWISE SPECIFED TOLERANCES

DECIMALS: X :±0.5, X.X :±0.3, X.XX :±0.2

ANGLES: X :±2°, X.X :±1°

Singatron Enterprise Co., Ltd.
信音企業股份有限公司

TITLE	DC POWER JACK		
DWN	Jie	PART NO. 2DC-G213-D74F	
CHKD		SCALE:4:1	UNIT: mm
APVD		SIZE: A3	SHEET:1 OF 1 REV:C

CUSTOMER COPY

文件編號:RD-06-043-A