REV.	ECN NO OR DESCRIPTION	REVISED	DATE
A	PDR NO.T081027-3A	Swina	2009.02.18

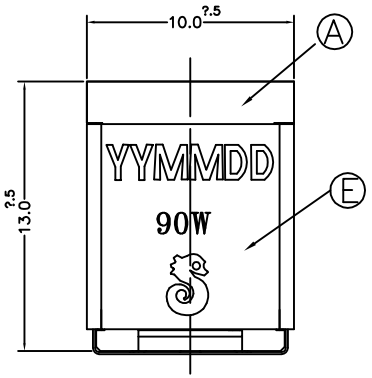

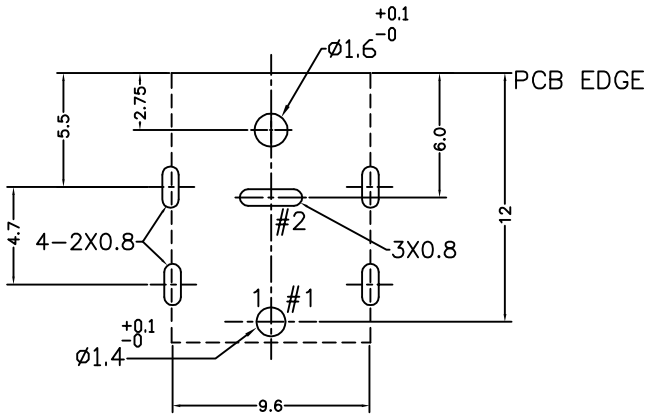

RECOMMEND P.C.B LAYOUT

TOP VIEW (TOLERANCE: ±0.05)

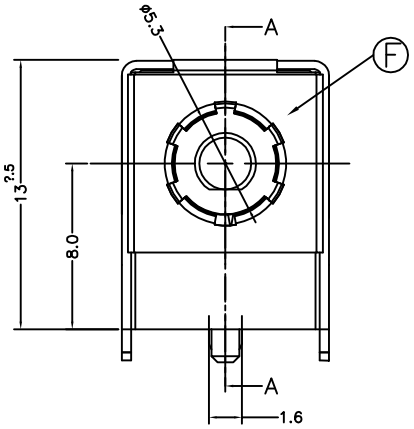

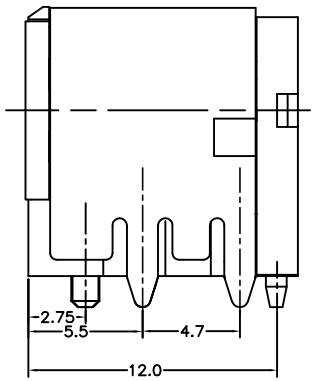

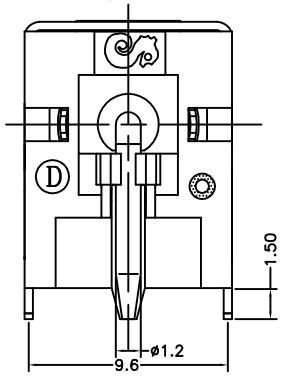

SPECIFICATIONS:
1.RATING: DC 20V 10A 44uF
2.INSERTION FORCE: 3.0Kg MAX.
WITHDRAWAL FORCE: 0.5Kg~3.0Kg
3.INSULATION RESISTANCE BETWEEN ANY ADJACENT TERMINALS SHALL NOT BE LESS THAN 100 MEGOHMS BY 500 VOLTS MEGGER.
4.JACK SHALL WITHSTAND 250 VOLTS BETWEEN ANY ADJACENT TERMINAL FOR ONE MINUTE.
5.CONTACT RESISTANCE (INITIAL) SHALL NOT EXCEED 30mΩ
CONTACT RESISTANCE (AFTER LIFE TEST) SHALL NOT EXCEED 50mΩ
6.MEASURING CONDITION:
TEMPERATURE: FROM 5°C TO 35°C.
RELATIVE HUMIDITY: FROM 40% TO 85%.
7.ENVIRONMENTAL SPECIFICATIONS:
7.1 HUMIDITY TEST: HUMIDITY 90% TO 95% TEMPERATURE 40°C ±2°C FOR 96 HOURS.
7.2 HEAT TEST: TEMPERATURE 70°C ± 2°C (HUMIDITY BELOW 50%) FOR 96 HOURS.
7.3 COLD TEST: TEMPERATURE −40°C ± 2°C FOR 96 HOURS.
8.PACKAGING: TAPE & REEL
9.PRINTED DATE CODE" YYMMDD " ON TOP OF CONNECTOR.
DD: DAY
MM: MONTH
YY: YEAR
10.RATING:DC 20V 10A 44uF DEPAND ON MATING PLUG DETAIL TYPE
11.TO CONFORM TO SINGATRON HAZARDOUS SUBSTANCE FREE SPEC.
12. HALOGEN FREE PRODUCT IDENTIFICATION MARK ON PRODUCT:
13. HALOGEN FREE PRODUCT IDENTIFICATION LOGO ON THE PACKAGING:
14.FOR LEAD-FREE PROCESS.

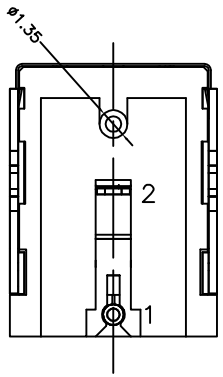

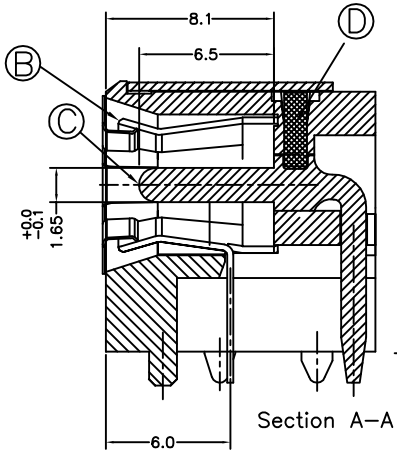

Section A-A

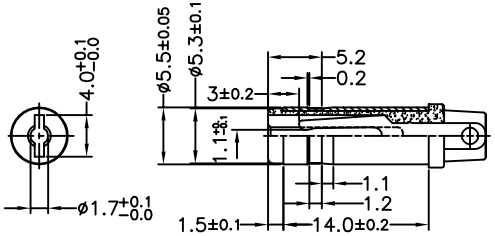

ø5.5PLUG STANDAR TYPE

2.RATING: DC 20V 7A 43uF

SCHEMATIC

1(+) CENTER PIN

2(−) TIP SPRING

NO	DESCRIPTION	QTY	MATERIAL	PLATING & COLOR
F	GROUND	1	SUS 304 0.1t	
E	SHIELDING	1	COPPER ALLOY 0.4t	Ni 60u Over Cu 60u
D	STOPPER	1	HIGH TEMP. THERMOPLASTIC UL 94V-0	BLACK
C	PIN	1	HBI59-1.5B	Ag20u On Contact Area, Cu60u All Over Ni60u
B	SPRING	1	COPPER ALLOY 0.3t	Sn 60u Over Ni 60u
A	BODY	1	HIGH TEMP. THERMOPLASTIC UL 94V-0	BLUE(298C)

UNLESS OTHERWISE SPECIFED TOLERANCES

DECIMALS: X :±0.5, X.X :±0.3, X.XX :±0.2

ANGLES: X :±2°, X.X :±1°

Singatron Enterprise Co., Ltd.
信音企業股份有限公司

TITLE	DC POWER JACK(90W)		
DWN	Swina 2009.02.18	PART NO. 2DC-G213-Q54	
CHKD	Boye	SCALE:4:1	UNIT: mm
APVD	Max	SIZE: A3	SHEET:1 OF 1 REV:A

CUSTOMER COPY

文件編號:RD-06-043-A