REV.	ECN NO OR DESCRIPTION	REVISED	DATE
A	PDR NO.T090213-1A	Sky	2009.03.16

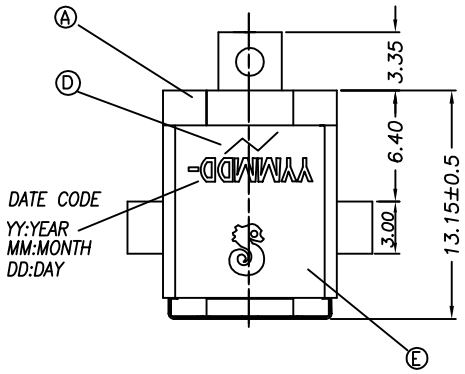

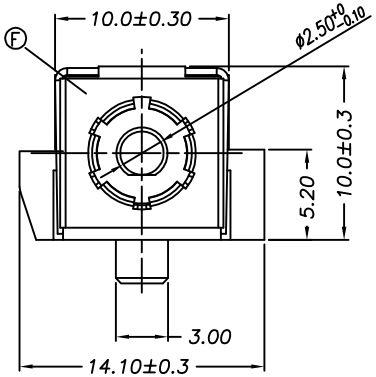

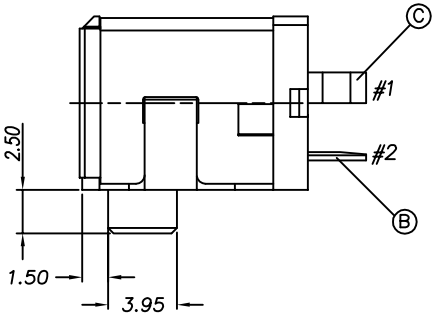

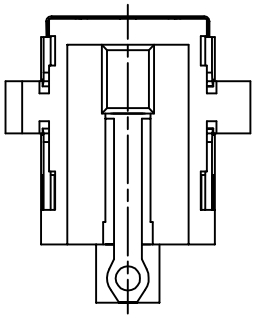

SCHEMATIC
#1CENTER PIN(+)
#2TIP SPRING(−)

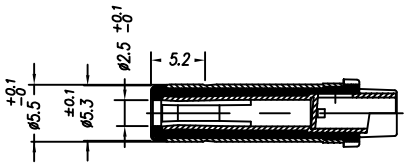

MATING PULG TYPE(2DP-G313-B01)
RATING: DC 20V 10A

SPECIFICATIONS:

1. INSERTION FORCE: 3.5KG MAX.
   WITHDRAWAL FORCE: 0.5KG−3.5KG
2. INSULATION RESISTANCE BETWEEN ANY ADJACENT TERMINALS SHALL NOT BE LESS THAN 100 MEGOHMS BY 500 VOLTS.
3. JACK SHALL WITHSTAND 250 VOLTS BETWEEN ANY ADJACENT TERMINAL FOR ONE MINUTE.
4. CONTACT RESISTANCE SHALL NOT EXCEED 30mΩ
5. JACK SHALL WITHSTAND 5,000 CYCLES OF INSERTION AND WITHDRAWAL WITH TESTING PLUG,AND CONTACT RESISTANCE SHALL NOT EXCEED 60mΩ
6. MEASURING CONDITION:
   TEMPERATURE: FROM 5°C TO 35°C.
   RELATIVE HUMIDITY: FROM 40% TO 85%.
7. ENVIRONMENTAL SPECIFICATIONS:
   7.1 HUMIDITY TEST: HUMIDITY 90% TO 95% TEMPERATURE 40°C ±2°C FOR 96 HOURS.
   7.2 HEAT TEST: TEMPERATURE 70°C ± 2°C (HUMIDITY BELOW 50%) FOR 96 HOURS.
   7.3 COLD TEST: TEMPERATURE −40°C ± 2°C FOR 96 HOURS.
8. TO CONFORM TO SINGATRON HAZARDOUS SUBSTANCE FREE SPEC.
9. GREEN PRODUCT IDENTIFICATION MARK ON JACK
10. GREEN PRODUCT IDENTIFICATION LABEL ON PACKAGING G.P. PASS
11. FOR HAND SOLDERING LEAD−FREE PROCESS.

NO	DESCRIPTION	QTY	MATERIAL	PLATING & COLOR
F	GROUND	1	STAINLESS 0.15T	N/A
E	SHIELDING	1	SPCC−SD 0.4T	Ni 60u" Over Cu 80u"
D	STOPPER	1	THERMOPLASTIC UL94V−0	N/A
C	PIN	1	BRASS BAR	Ni 50u"
B	SPRING	1	COPPER ALLOY 0.3T	Sn 60u"Over Ni 60u"
A	BODY	1	THERMOPLASTIC UL94V−0	BLACK

UNLESS OTHERWISE SPECIFED TOLERANCES

DECIMALS: X :±0.5, X.X :±0.3, X.XX :±0.2
ANGLES: X :±2°, X.X:±1°

Singatron Enterprise Co., Ltd.
信音企業股份有限公司

TITLE	DC POWER JACK		
DWN	Sky 2009.03.16	PART NO. 2DC-G233-B24	
CHKD	Boye	SCALE:4:1	UNIT: mm
APVD	Lussen	SIZE: A3	SHEET:1OF1	REV: A

CUSTOMER COPY

文件編號: RD-06-043-A