REV.	ECN NO OR DESCRIPTION	REVISED	DATE
B	ECN:C140130 MODIFY PLATING	CAOCHEN	2014.07.01
C	ECN:C140250 MODIFY DRAWING	CAOCHEN	2014.11.25

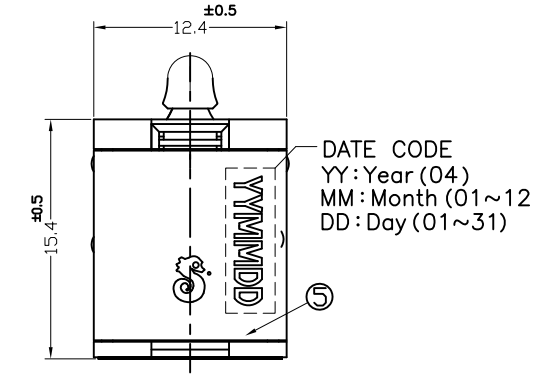

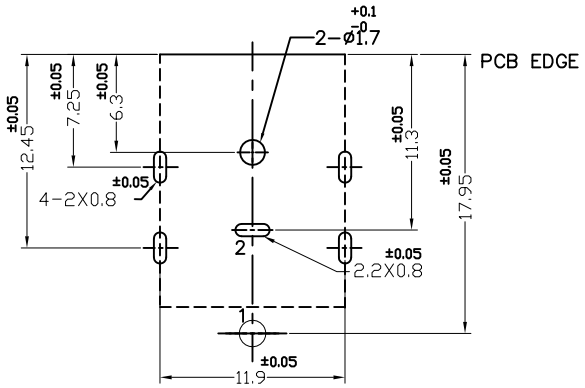

RECOMMENDED P.C.B LAYOUT

SOLDERING SIDE

SPECIFICATIONS:
1.RATING: DC 30V 10A
2.INSERTION FORCE: 2.5Kg MAX.
WITHDRAWAL FORCE: 1.0Kg~2.5Kg
3.INSULATION RESISTANCE BETWEEN ANY ADJACENT TERMINALS SHALL NOT BE LESS THAN 100 MEGOHMS BY 500 VOLTS MEGGER.
4.JACK SHALL WITHSTAND 250 VOLTS BETWEEN ANY ADJACENT TERMINAL FOR ONE MINUTE.
5.CONTACT RESISTANCE (INITIAL) SHALL NOT EXCEED 30mΩ
CONTACT RESISTANCE (AFTER LIFE TEST) SHALL NOT EXCEED 30mΩ
ABOVE MUST USE 2DP-G313-B01 PLUG
6.MEASURING CONDITION:
TEMPERATURE: FROM 5°C TO 35°C.
RELATIVE HUMIDITY: FROM 40% TO 85%.
7.ENVIRONMENTAL SPECIFICATIONS:
7.1 HUMIDITY TEST: HUMIDITY 90% TO 95% TEMPERATURE 40°C ±2°C FOR 96 HOURS.
7.2 HEAT TEST: TEMPERATURE 70°C ± 2°C (HUMIDITY BELOW 50%) FOR 96 HOURS.
7.3 COLD TEST: TEMPERATURE -40°C ± 2°C FOR 96 HOURS.
8.MATING PLUG : SINGATRON'S P/N : 2DP-G313-B01(PLUG SET)
9.PACKING: TAPE & REEL
10. TO CONFORM TO SINGATRON HAZARDOUS SUBSTANCE FREE SPEC.
11. HALOGEN FREE PRODUCT IDENTIFICATION MARK ON PRODUCT:
12. HALOGEN FREE PRODUCT IDENTIFICATION LABEL ON PACKAGING:
13. FOR LEAD-FREE PROCESS.

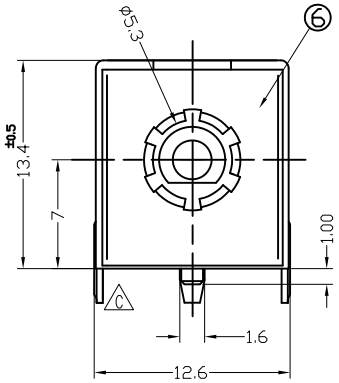

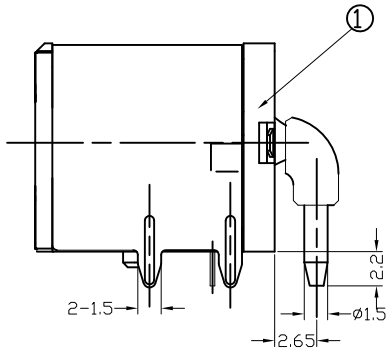

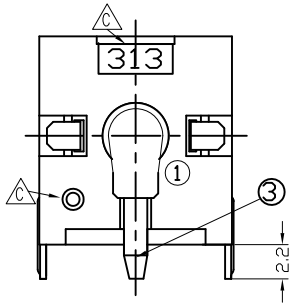

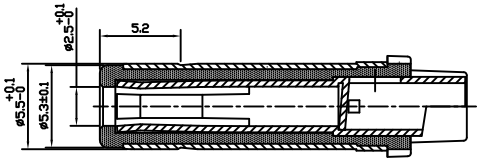

ø5.5 PULG(2DP-G313-B01)

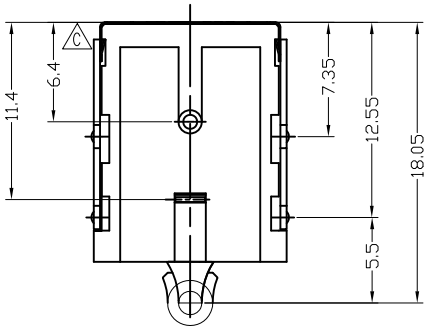

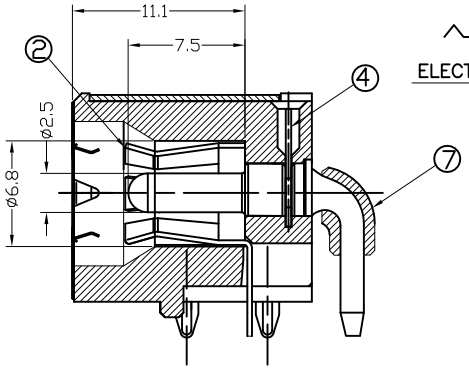

A - A' SECTION

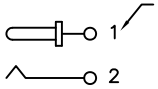

ELECTRICAL CIRCUIT

NO	DESCRIPTION	QTY	MATERIAL	PLATING & COLOR
7	HEAT SHRINKABLE TUBING	1	POLYOLEFIN 3.2ø	BLACK COLOR
6	GROUNDING	1	STAINLESS 0.1t	
5	SHIELDING	1	SPCC-SD 0.4t	TIN PLATING (LEAD-FREE)
4	TERMINAL	1	STAINLESS 0.1t	
3	PIN	1	BRASS BAR	SILVER PLATING
2	TIP	1	COPPER ALLOY 0.3t	TIN PLATING
1	BODY	1	HIGH TEMP. THERMOPLASTIC	BLACK COLOR

UNLESS OTHERWISE SPECIFED TOLERANCES

DECIMALS: X :±0.5, X.X :±0.3, X.XX :±0.2

ANGLES: X :±2°, X.X :±1°

Singatron Enterprise Co., Ltd.
信音企業股份有限公司

TITLE	DC POWER JACK			
DWN	Chen 14/12/12	PART NO. 2DC-G313-B06		
CHKD	BILLY 14/12/12	SCALE 3:1	UNIT: mm	
APVD	ZJZ 14/12/12	SIZE: A4	SHEET: 10F1	REV: C

CUSTOMER COPY

文件編號:RD-06-043-A