REV.	ECN NO OR DESCRIPTION	REVISED	DATE
A	PRODUCT RELEASE	DA	2006.12.08
B	ECR:C110316 修改圖面與實物相符	LIPING	2011.10.12
C	ECN:C110345-4 MODIFY DIMENSION	Haijin	2012.01.04

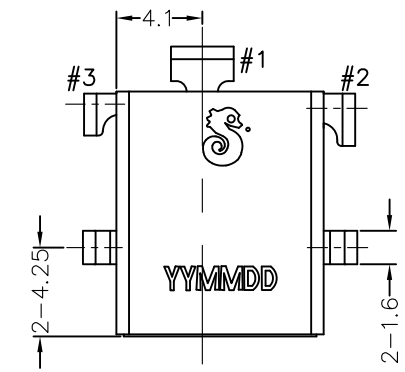

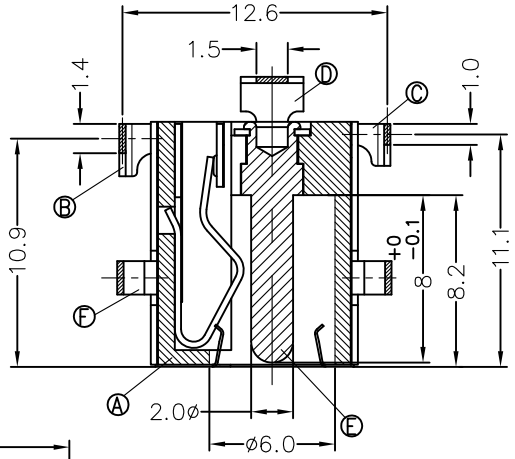

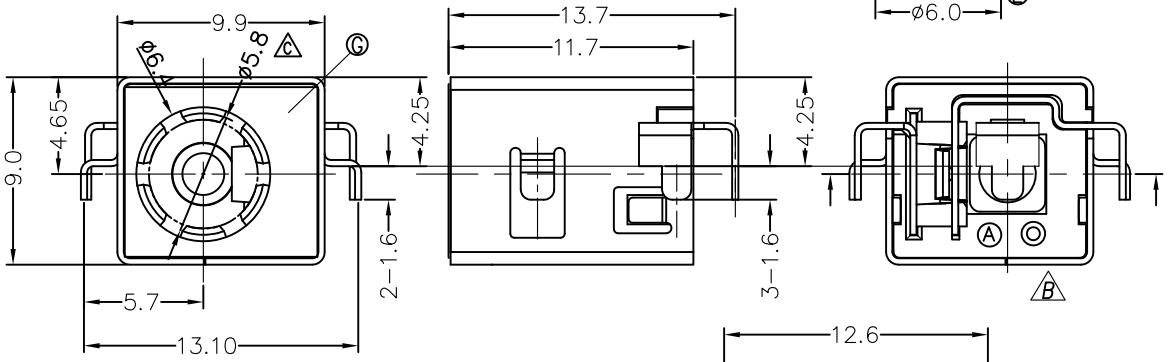

SPECIFICATIONS:

1. RATING: DC 20V 5.5A
2. INSERTION FORCE: 0.4Kg~3.0Kg
   WITHDRAWAL FORCE: 0.4Kg~3.0Kg
3. INSULATION RESISTANCE BETWEEN ANY ADJACENT TERMINALS SHALL NOT BE LESS THAN 100 MEGOHMS BY 500 VOLTS MEGGER.
4. JACK SHALL WITHSTAND 500 VOLTS BETWEEN ANY ADJACENT TERMINAL FOR ONE MINUTE.
5. CONTACT RESISTANCE SHALL NOT EXCEED 0.03 OHMS.
6. JACK SHALL WITHSTAND 5,000 CYCLES OF INSERTION AND WITHDRAWAL WITH TESTING PLUG, AND CONTACT RESISTANCE SHALL NOT EXCEED 0.06 OHMS.
7. MEASURING CONDITION:
   TEMPERATURE: FROM 5°C TO 35°C.
   RELATIVE HUMIDITY: FROM 40% TO 85%.
8. PACKING: TAPE & REEL.
9. TO CONFORM TO THE "SE-01-001" & "ROHS DIRECTIVE"
10. GREEN PRODUCT IDENTIFICATION MARK IN JACK: ◎ B
11. GREEN PRODUCT IDENTIFICATION LABEL ON PACKAGING: B
12. FOR REFLOW SOLDERING LEAD FREE PROCESS.
13. PRINTED DATE CODE "YYMMDD" ON TOP OF CONNECTOR.

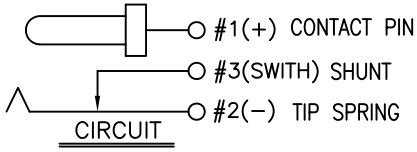

YYMMDD
- DD: DAY
- MM: MONTH
- YY: YEAR

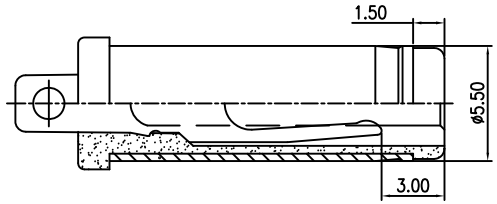

MATING PLUG ø5.50
(TOLERANCES:±0.05)

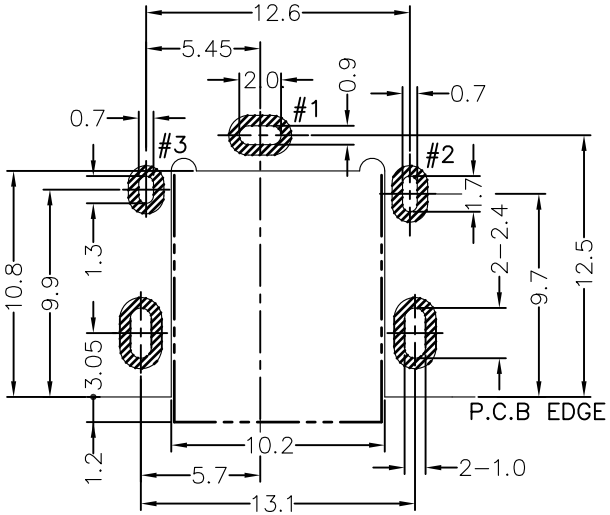

RECOMMENDED P.C.B LAYOUT (t=1.1)
TOP VIEW Tolerance:±0.05

NO	DESCRIPTION	QTY	MATERIAL	PLATING & COLOR
G	GROUNDING	1	SUS 0.1T	N/A
F	SHIELDING	1	SPCC 0.3t	NICKEL PLATING
E	CONTACT PIN	1	BRASS ø2.0	NICKEL PLATING
D	TERMINAL	1	COPPER ALLOY 0.3t	SILVER PLATING
C	SHUNT	1	BRASS 0.3t	SILVER PLATING
B	TIP SPRING	1	COPPER ALLOY 0.3t	SILVER PLATING
A	BODY	1	NYLON-10T+30% GF	BLACK COLOR

UNLESS OTHERWISE SPECIFED TOLERANCES

DECIMALS: X :±0.5, X.X :±0.3, X.XX :±0.2
ANGLES: X :±2°, X.X :±1°

Singatron Enterprise Co., Ltd.
信音企業股份有限公司

TITLE	DC POWER JACK		
DWN	HAJIN 2012.01.04	PART NO. 2DC-G328-D04	
CHKD	ZJZ 2012.01.04	SCALE 4:1	UNIT: mm
APVD	LIAO 2012.01.04	SIZE: A3	SHEET: 1 OF 1 REV: C

CUSTOMER COPY

文件編號 RD-06-043-A