REV.	ECN NO OR DESCRIPTION	REVISED	DATE
A	PDR NO: T090821-2A	BOYE	2009.10.21
B	ECN NO.S101125	Swing	2010.12.14

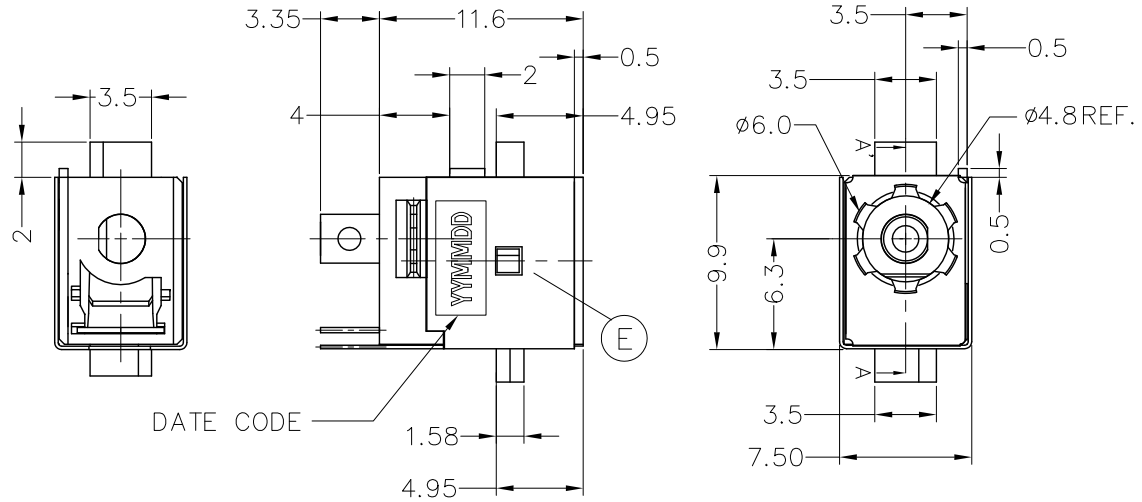

SPECIFICATIONS:

1.ELECTRICAL CHARACTERISTICS:
- 1-1.RATING: DC 20V 7A
- 1-2.CONTACT RESISTANCE : 30mΩ Max(INITAL)
- 1-3.DIELECTRIC WITHSTANDING VOLTAGE: 500V AC FOR ONE MINUTE
- 1-4.INSULATION RESISTANCE: 100mΩ MIN,MEASURED BY 500 VDC

2.MECHANICAL CHARACTERISTICS:
- 2-1.INSERTION FORCE: 1.0KG-3.0KG
- 2-2.WITHDRAWAL FORCE: 1.0KG-3.0KG

3.LIFE TEST: 5,000 CYCLES MIN.
4.OTHER GENERAL SPEC TO REFER"DC POWER JACK"SPEC
5.TO CONFORM TO SINGATRON HAZARDOUS SUBSTANCE FREE SPEC
6.GREEN PRODUCT IDENTIFICATION MARK ON JACK: △
7.GREEN PRODUCT IDENTIFICATION LABEL ON PACKAGING: G.P. PASS
8.FOR HAND SOLDERING LEAD FREE PROCESS.
9.PRINTED DATE CODE" YYMMDD" ON TOP OF CONNECTOR.

YYMMDD
- DD: DAY
- MM: MONTH
- YY: YEAR

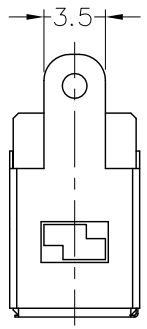

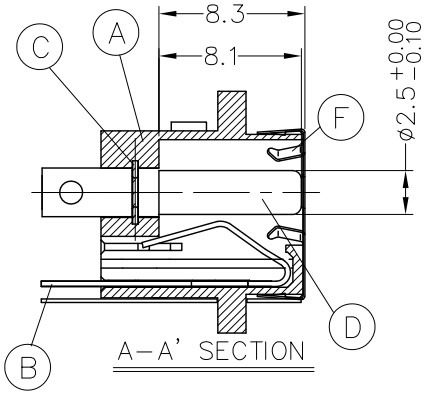

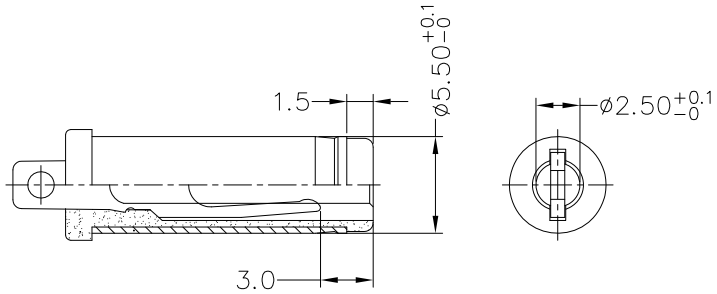

MATING PLUG ø5.50

SCHEMATIC

NO	DESCRIPTION	QTY	MATERIAL	PLATING & COLOR
F	GROUND	1	STAINLESS 0.1t	N/A
E	SHIELDING	1	BRASS STRIP 0.2t	Ni 60u" Min.
D	PIN	1	BRASS BAR	Gold Flash Over Ni60u"Min
C	TERMINAL	1	STAINLESS 0.3t	N/A
B	TIP SPRING	1	COPPER ALLOY 0.3t	Ag 20u"Min Over Ni60u"Min
A	BODY	1	HIGH TEMP.THERMOPLASTIC UL 94V-0	BLACK COLOR

UNLESS OTHERWISE SPECIFED TOLERANCES

DECIMALS: X :±0.5, X.X :±0.3, X.XX :±0.2

ANGLES: X :±2°, X.X :±1°

Singatron Enterprise Co., Ltd.
信音企業股份有限公司

TITLE	DC POWER JACK			
DWN	Swing 2010.12.14	PART NO.2DC-G756-B88		
CHKD	Lussen	SCALE:4:1	UNIT: mm	
APVD	Tony	SIZE: A3	SHEET:1 OF 1	REV: B

CUSTOMER COPY

文件編號: RD-06-043-A