REV.	ECN NO OR DESCRIPTION	REVISED	DATE
B	ECN NO. S070519	TONY	2007.5.22
C	ECN NO.S070616&s070703	Quan-Zhou	2007.8.23
D	ECN NO. S120932	Danfeng	2012.10.10

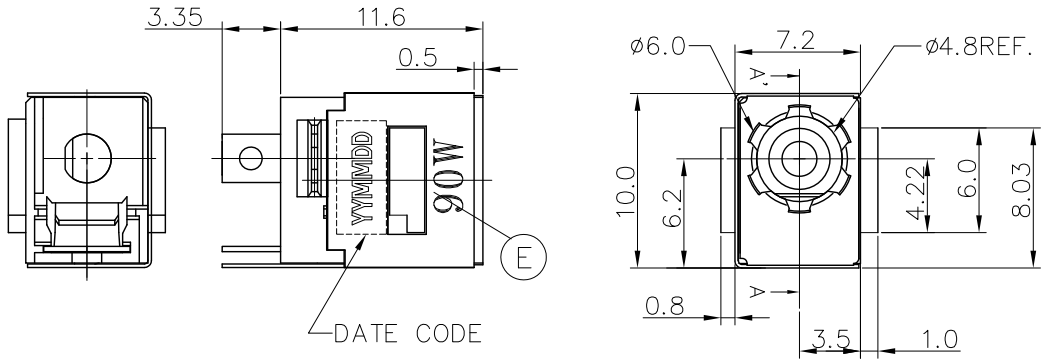

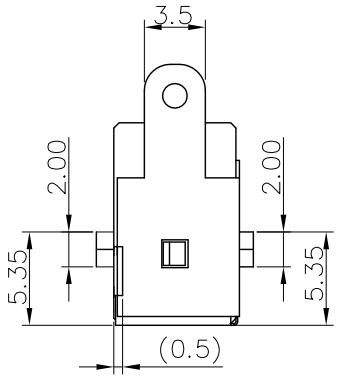

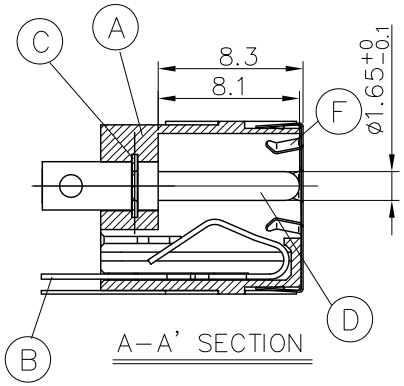

A–A' SECTION

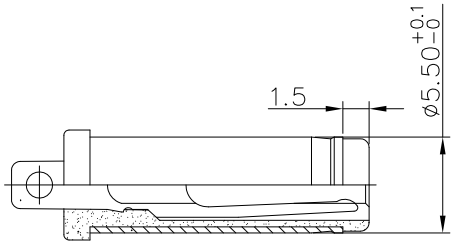

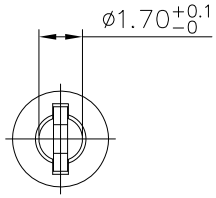

MATE PLUG ø5.50

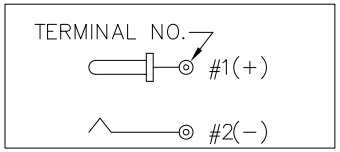

ELECTRICAL CIRCUIT

SPECIFICATIONS:

1. RATING: DC 20V 7A
2. INSERTION FORCE: 1.0KGf–3.0KGf
   WITHDRAWAL FORCE: 1.0KGf–3.0KGf
3. INSULATION RESISTANCE BETWEEN ANY ADJACENT TERMINALS SHALL NOT BE LESS THAN 100 MEGOHMS BY 500 VOLTS MEGGER.
4. JACK SHALL WITHSTAND 250 VOLTS BETWEEN ANY ADJACENT TERMINAL FOR ONE MINUTE.
5. CONTACT RESISTANCE SHALL NOT EXCEED 15mΩ
6. JACK SHALL WITHSTAND 5,000 CYCLES OF INSERTION AND WITHDRAWAL WITH TESTING PLUG,AND CONTACT RESISTANCE SHALL NOT EXCEED 15mΩ
7. MEASURING CONDITION:
   TEMPERATURE: FROM 5°C TO 35°C.
   RELATIVE HUMIDITY: FROM 40% TO 85%
8. ENVIRONMENTAL SPECIFICATIONS:
   8.1 HUMIDITY TEST: HUMIDITY 90% TO 95% TEMPERATURE 40°C ± 2°C FOR 96 HOURS.
   8.2 HEAT TEST: TEMPERATURE 70°C ± 2°C (HUMIDITY BELOW 50%) FOR 96 HOURS.
   8.3 COLD TEST: TEMPERATURE –40°C ± 2°C FOR 96 HOURS.
9. SOLDERABILITY TEST: THE TERMINATION IS AT LEAST 95% COVERED BY A CONTINUOUS NEW SOLDER COATING.
   TEST CONDITION: DIP IN MOLTEN SOLDER FOR 5 Sec. AT 245±5°C
   (TERMINATION SHALL BE IMMERSED IN FLUX BEFORE TEST)
10. SOLDERING CONDITION: WAVE SOLDERING.
11. TO CONFORM TO THE "SE–01–001" & "ROHS DIRECTIVE"
12. GREEN PRODUCT IDENTIFICATION MARK IN JACK:
13. GREEN PRODUCT IDENTIFICATION LABEL IN PACKING:
14. FOR LEAD FREE PROCESS.
15. PRINTED DATE CODE" YYMMDD" ON TOP OF CONNECTOR.
    - DD: DAY
    - MM: MONTH
    - YY: YEAR

NO	DESCRIPTION	QTY	MATERIAL	PLATING & COLOR
F	GROUND	1	STAINLESS 0.1t	N/A
E	SHIELDING	1	BRASS STRIP 0.2t	Ni60u"Min.
D	PIN	1	BRASS BAR	Ag 0.5um Min.
C	TERMINAL	1	STAINLESS 0.3t	N/A
B	TIP SPRING	1	COPPER ALLOY 0.3t	Ag 0.5um Min.
A	BODY	1	THERMOPLASTIC UL 94V-0	BLUE COLOR(298C)

UNLESS OTHERWISE SPECIFED TOLERANCES

DECIMALS: X :±0.5, X.X :±0.3, X.XX :±0.2

ANGLES: X :±2°, X.X :±1°

Singatron Enterprise Co., Ltd.
信音企業股份有限公司

TITLE	DC POWER JACK		
DWN	Danfeng	PART NO.2DC-G756-I11	
CHKD	TOM	SCALE:3/1	UNIT: mm
APVD	QUAN	SIZE: A3	SHEET:1 OF 1 REV: D

CUSTOMER COPY

Form: 2

文件編號 RD-06-043-A