＊ REVISIONS				
LTR	DESCRIPTION	DATE	REVISED	APPROVED
△1x1	修改平整度為+0.1/−0.15符合現品	2009.08.26	ANJOU	GIEVEN
△2x2	修改圖面畫法符合現品	2009.10.07	ANJOU	GIEVEN

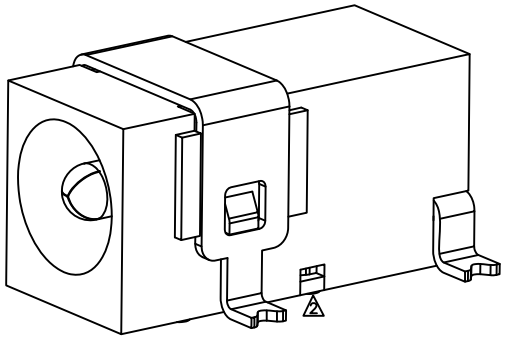

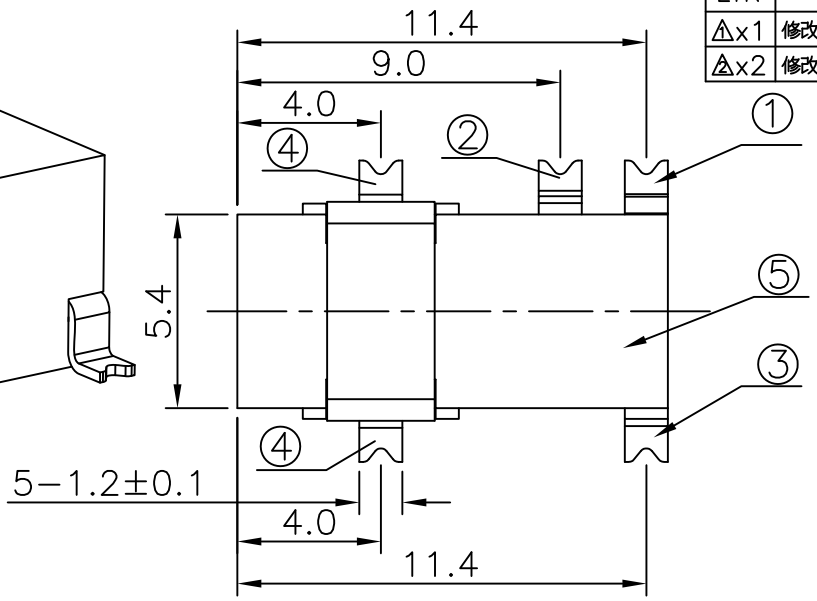

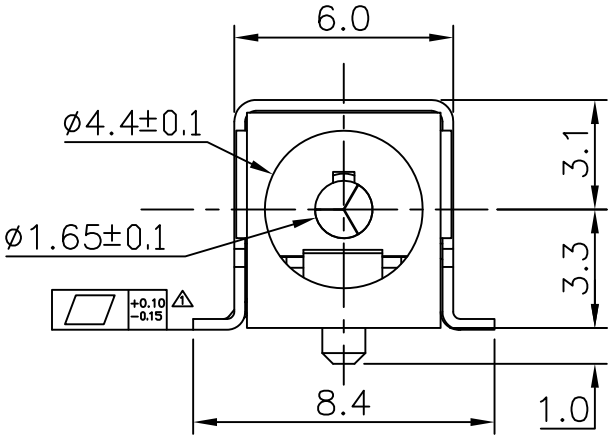

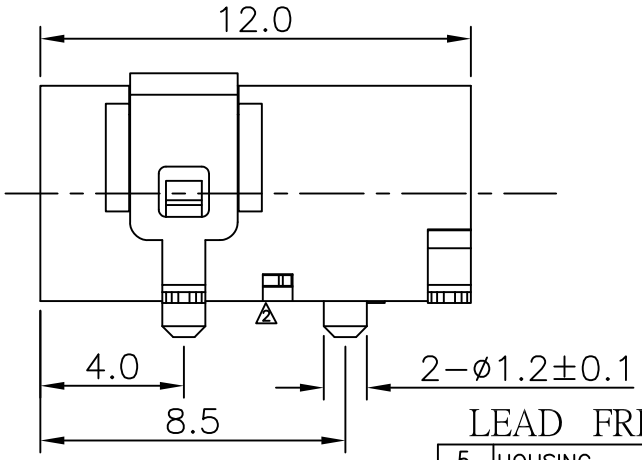

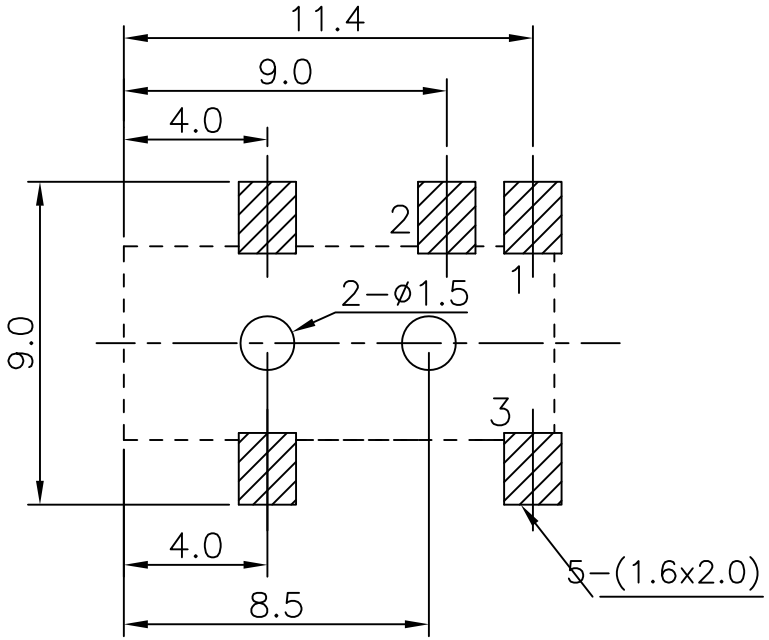

T:1.6 Dimensions of PC board holes

Tolerance : ±0.1(Printed−top view)

LEAD FREE

LTR	PART NAME	QTY	MATERIAL	REMARK
5	HOUSING	1	PA9T	UL−94V(BLACK)
4	TERMINAL	1	C2680 t=0.30	MB:Ni Ag PLATED
3	TERMINAL	1	C2680 t=0.30	MB:Ni Ag PLATED
2	TERMINAL	1	C5191 t=0.30	MB:Ni Ag PLATED
1	TERMINAL	1	C2680 t=0.30	MB:Ni Ag PLATED

SCHEMATIC

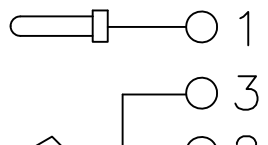

DWN	ANJOU	DATE	2009.04.20	3RD ANGLE PROJECTION	NAME DC POWER JACK
CHKD	ANJOU	DATE	2009.04.20		CAT. NO. 2DC−K020−23
APVD	GIEVEN	DATE	2009.04.20	UNIT: mm	
SINGATRON U.S.A.					DWN.NO. 02−020−23 005

UNLESS OTHERWISE SPECIFIED, TOLERANCE ON DECIMAL: ±0.2