REV.	ECN NO OR DESCRIPTION	REVISED	DATE
A	PRODUCT RELEASE	BILLY	2014.06.13

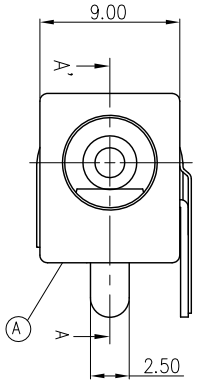

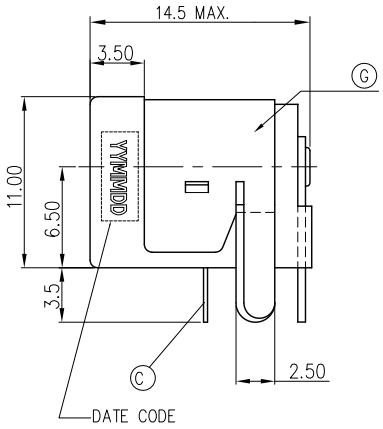

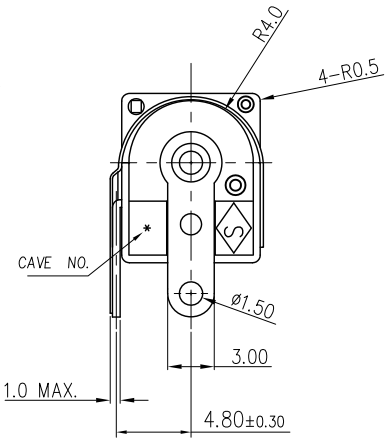

SPECIFICATIONS:

1.RATING: DC 20V, 4A

2.INSERTION FORCE: 0.8KG-2.5KG
WITHDRAWAL FORCE: 0.8KG-3.0KG

3.INSULATION RESISTANCE BETWEEN ANY ADJACENT TERMINAL SHALL NOT BE LESS THAN 100 MEGOHMS BY 500V DC.

4.JACK SHALL WITHSTAND 250 VOLTS BETWEEN ANY ADJACENT TERMINAL FOR ONE MINUTE.

5.CONTACT RESISTANCE SHALL NOT EXCEED 0.03 OHMS.(INITIAL)

6.JACK SHALL WITHSTAND 5,000 CYCLES OF INSERTION AND

7.MEASURING CONDITION:
TEMPERATURE: FROM 5℃ TO 35℃.
RELATIVE HUMIDITY: FROM 40% TO 85%.

8.ENVIRONMENTAL SPECIFICATIONS:
8.1 HUMIDITY TEST: HUMIDITY 90% TO 95% TEMPERATURE 40℃ ± 2℃ FOR 96 HOURS.
8.2 HEAT TEST: TEMPERATURE 70℃ ± 2℃ (HUMIDITY BELOW 50%) FOR 96 HOURS.
8.3 COLD TEST: TEMPERATURE -40℃ ± 2℃ FOR 96 HOURS.

9.TO CONFORM TO SINGATRON HAZARDOUS SUBSTANCE FREE SPECIFICATION.

10. HALOGEN FREE PRODUCT IDENTIFICATION MARK ON PRODUCT:

11. HALOGEN FREE PRODUCT IDENTIFICATION LABEL ON PACKAGING:

12. FOR REFLOW SOLDERING LEAD-FREE PROCESS.

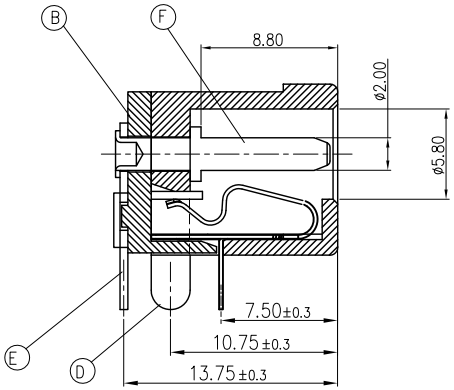

SECTION"A-A"

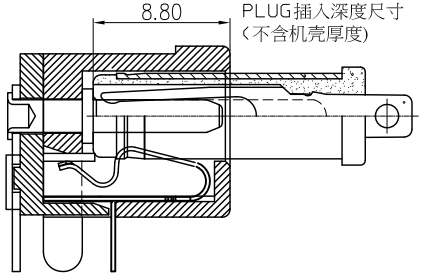

DC PLUG INSERT DEPTH

SCHEMATIC

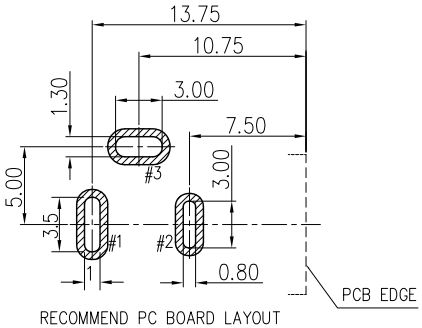

RECOMMEND PC BOARD LAYOUT
TOP VIEW (TOLERANCE ±0.05)

REFERENCE MATING PLUG

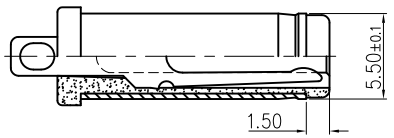

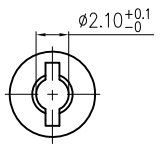

NO	DESCRIPTION	QTY	MATERIAL	PLATING & COLOR
G	SHIELDING PLATE	1	COPPER ALLOY 0.2T	Ni60u"MIN.
F	PIN	1	COPPER ALLOY	Ni60u"MIN.
E	TERMINAL	1	COPPER ALLOY 0.5T	Ag20u"MIN,Ni20u"MIN.
D	SHUNT TERMINAL	1	COPPER ALLOY 0.5T	Ag20u"MIN,Ni20u"MIN.
C	TIP SPRING	1	COPPER ALLOY 0.25T	Gold flash on contact area. all over Ni plated
B	COVER	1	THERMAL PLASTIC UL 94V-0	BLACK COLOR
A	BODY	1	THERMAL PLASTIC UL 94V-0	BLACK COLOR

UNLESS OTHERWISE SPECIFED TOLERANCES

DECIMALS: X :±0.5, X.X :±0.3, X.XX :±0.2

ANGLES: X :±2°, X.X :±1°

Singatron Enterprise Co., Ltd.
信音企業股份有限公司

TITLE	DC POWER JACK			
DWN	BILLY 14/6/18	PART NO. 2DC-S005-D15F		
CHKD	ZJZ 14/6/18	SCALE 3:1	UNIT: mm	
APVD	Liao 14/6/18	SIZE: A4	SHEET: 1OF1	REV: A

CUSTOMER COPY

文件編號RD-06-043-A