REV.	ECN NO OR DESCRIPTION	REVISED	DATE
B	[1] MODIFY TIN ALLOY → NICKEL	Connie	10/23-'02
C	RATING 10.5V 2A → 20V 4A	AMY	11/6-'02

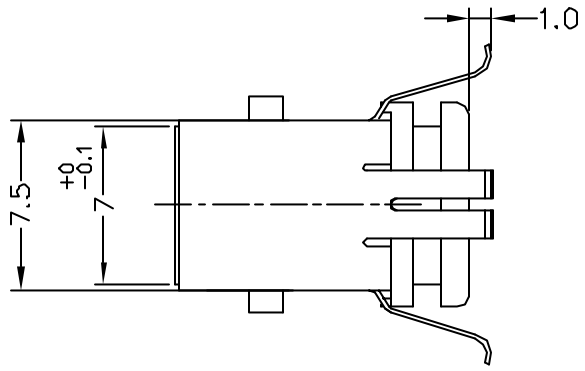

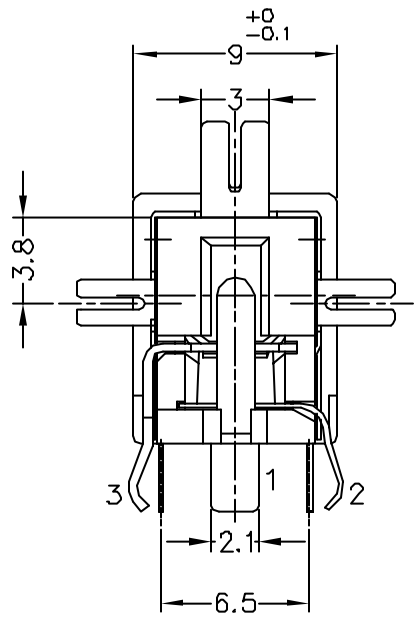

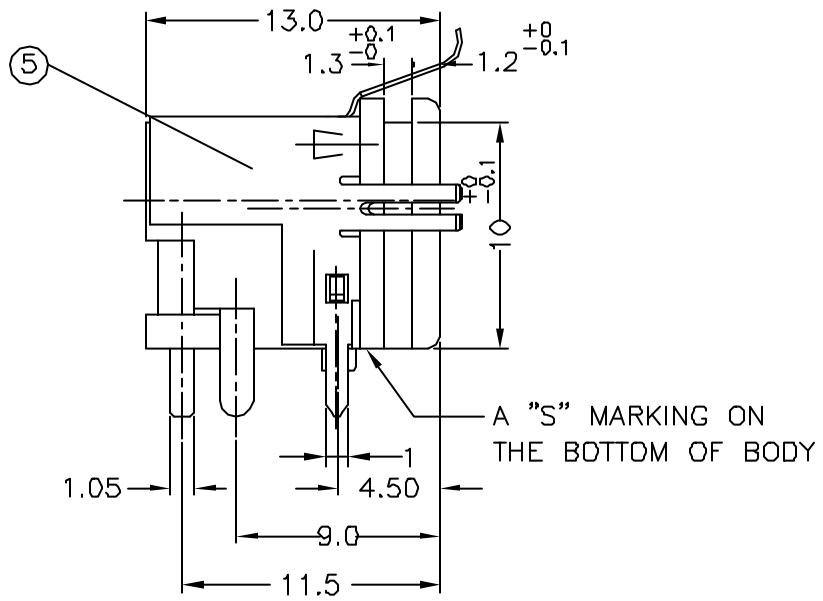

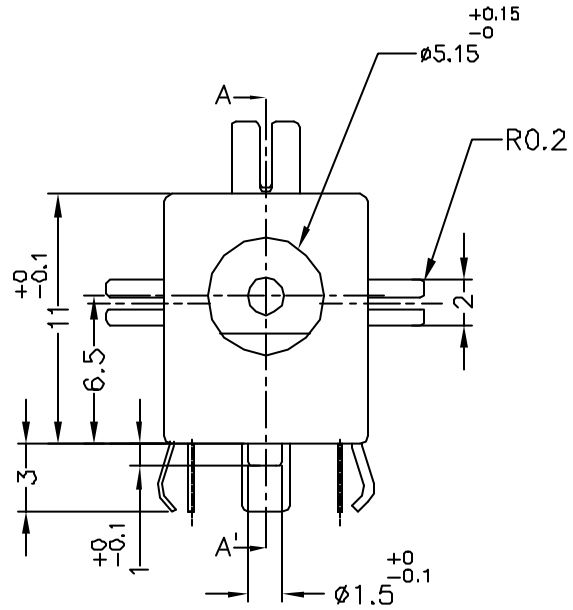

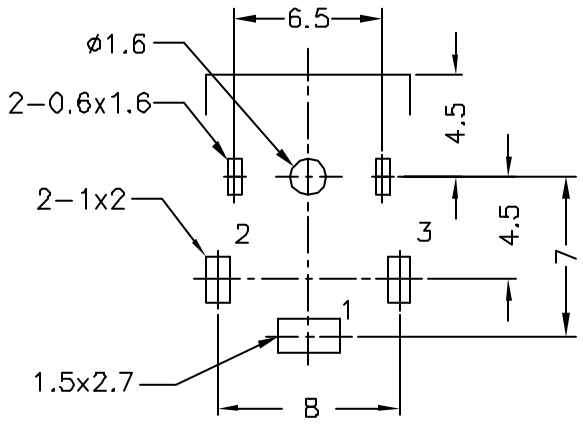

PC BOARD LAYOUT

BOTTOM VIEW

TOLERANCES:±0.05

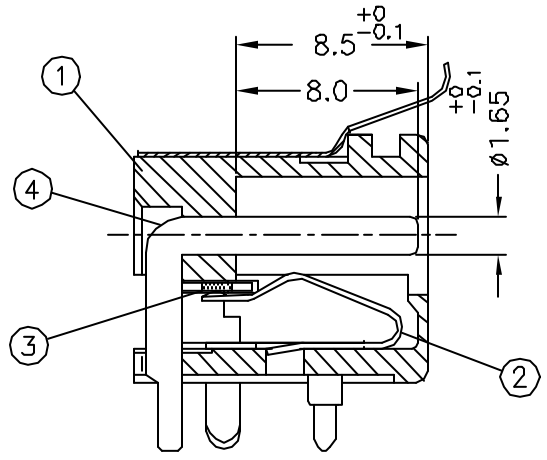

A–A' SECTION

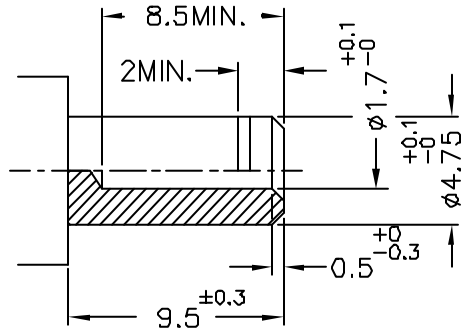

MATING PLUG

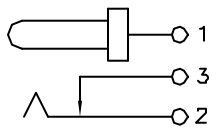

CIRCUIT

SPECIFICATIONS:

1. RATING: DC 20V 4A
2. INSERTION FORCE: 2Kg MAX.
   WITHDRAWAL FORCE: 0.3Kg~1.5Kg
3. INSULATION RESISTANCE BETWEEN ANY ADJACENT TERMINALS SHALL NOT BE LESS THAN 100 MEGOHMS BY 500 VOLTS MEGGER.
4. JACK SHALL WITHSTAND 500 VOLTS BETWEEN ANY ADJACENT TERMINAL FOR ONE MINUTE.
5. CONTACT RESISTANCE SHALL NOT EXCEED 0.03 OHMS.
6. JACK SHALL WITHSTAND 5,000 CYCLES OF INSERTION AND WITHDRAWAL WITH TESTING PLUG, AND CONTACT RESISTANCE SHALL NOT EXCEED 0.06 OHMS.
7. MEASURING CONDITION:
   TEMPERATURE: FROM 5°C TO 35°C.
   RELATIVE HUMIDITY: FROM 40% TO 85%.

NO	DESCRIPTION	QTY	MATERIAL	PLATING & COLOR
5	SHIELDING	1	COPPER ALLOY 0.2t	NICKEL PLATING [1]
4	CONTACT PIN	1	BRASS	SILVER PLATING
3	SHUNT TERMINAL	1	BRASS 0.4t	SILVER PLATING
2	TIP SPRING	1	COPPER ALLOY 0.25t	SILVER PLATING
1	BODY	1	HIGH TEMP. THERMOPLASTIC UL 94V-0	BLACK COLOR

UNLESS OTHERWISE SPECIFED TOLERANCES

Singatron Enterprise Co., Ltd.
信音企業股份有限公司

DECIMALS: X :±0.3, X.X :±0.2, X.XX :±0.1

ANGLES: X :±2°, X.X :±1°

TITLE	DC POWER JACK		
DWN	AMY 11/6-'02	PART NO. 2DC-S034I500	
CHKD	SHUN 11/6-'02	SCALE:3/1	UNIT: MM
APVD	MAI 11/6-'02	SIZE: A3	SHEET:1 OF 1 REV: C

Form: 1