REV.	ECN NO OR DESCRIPTION	REVISED	DATE
A	PRODUCT RELEASE	CHENEY	2021.06.16

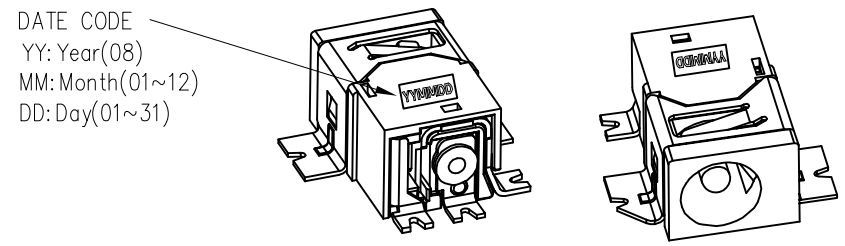

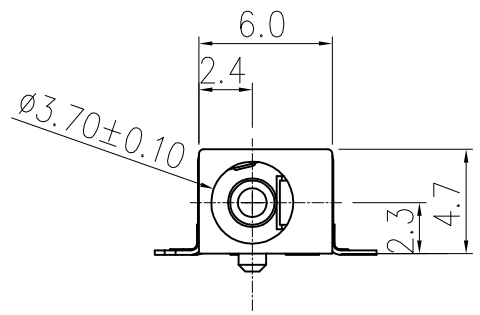

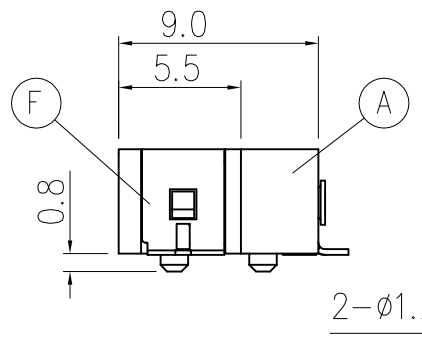

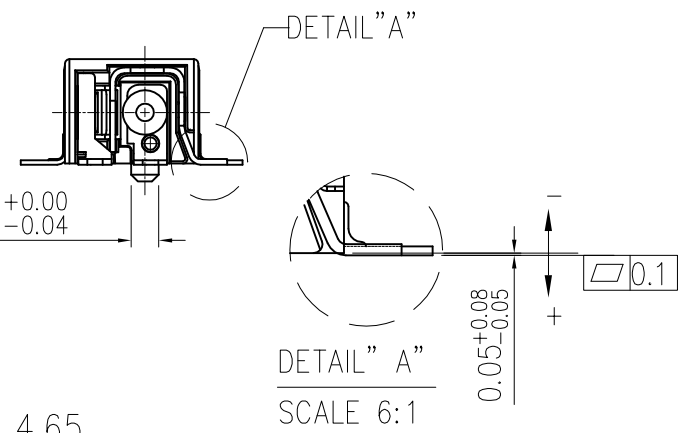

SPECIFICATIONS:

1. ELECTRICAL CHARACTERISTICS:
   1-1. RATING: DC 24V 4A
   1-2. CONTACT RESISTANCE: 30m MAX.(INITIAL)
   1-3. DIELECTRIC WITHSTANDING VOLTAGE: 500V AC FOR ONE MINUTE.
   1-4. INSULATION RESISTANCE: 100M MIN. MEASURED BY 500 VDC
2. MECHANICAL CHARACTERISTICS:
   2-1. INSERTION FORCE : 0.3~2.0 KGF
   2-2. WITHDRAWAL FORCE : 0.3~2.0 KGF
3. LIFE TEST: 10,000 CYCLES MIN.
4. OTHER GENERAL SPEC. TO REFER "DC POWER JACK SPEC".
5. TO CONFORM TO SINGATRON HAZARDOUS SUBSTANCE FREE SPEC.
6. GREEN PRODUCT IDENTIFICATION MARK ON JACK:◎
7. GREEN PRODUCT IDENTIFICATION LABEL ON PACKAGING:
8. FOR REFLOW SOLDERING LEAD-FREE PROCESS.
9. PACKAGING: TAPE & REEL.

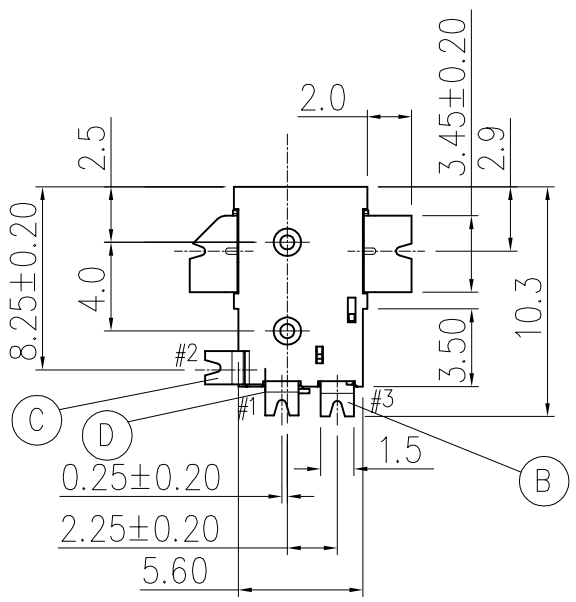

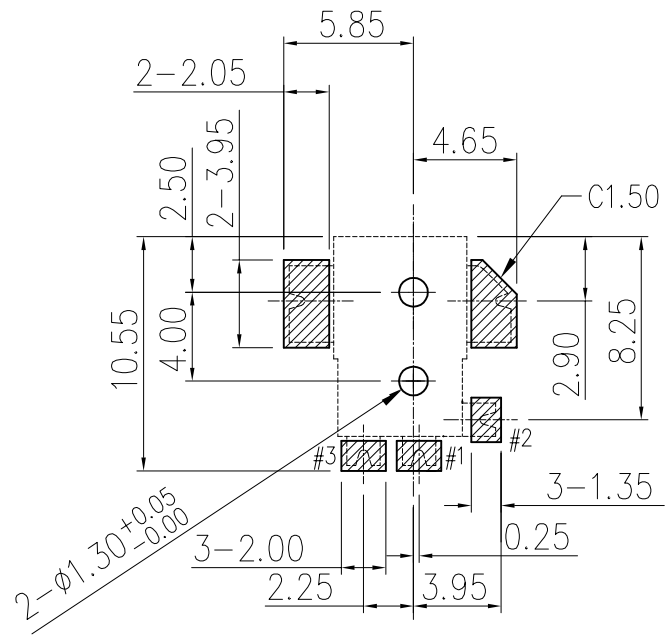

RECOMMENDED P.C.B LAYOUT
PRINTED SIDE
(TOLERANCE: ±0.05)

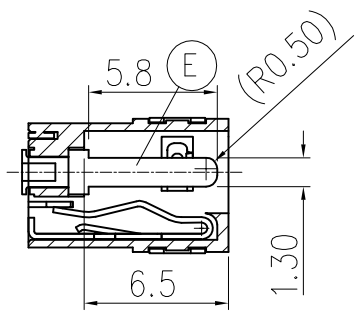

SCHEMATIC

NO	DESCRIPTION	QTY	MATERIAL	PLATING & COLOR
F	SHIELDING	1	BRASS STRIP 0.2t	GOLD FLASH PLATING
E	PIN	1	BRASS BAR	NICKEL PLATING
D	TERMINAL	1	BRASS STRIP 0.2t	SILVER PLATING
C	SHUNT TERMINAL	1	BRASS STRIP 0.25t	SILVER PLATING
B	TIP SPRING	1	BERYLLIUM COPPER 0.25t	SILVER PLATING
A	BODY	1	HIGH TEMP. THERMOPLASTIC UL 94V-0	BLACK COLOR

UNLESS OTHERWISE SPECIFED TOLERANCES

DECIMALS: X : ±0.5, X.X : ±0.3, X.XX : ±0.2

ANGLES: X : ±2°, X.X : ±1°

Singatron Enterprise Co., Ltd.
信音企業股份有限公司

TITLE	DC POWER JACK			
DWN	Nanlin-Chen	PART NO.2DC-S050-H13F		
CHKD	Qicai-Hu	SCALE 1:1	UNIT: mm	
APVD	jim-deng	SIZE: A3	SHEET: 1OF1	REV: A

CUSTOMER COPY

RD-06-043-A