REV.	ECN NO OR DESCRIPTION	REVISED	DATE
A	PDR NO.S110920-2A	LILY	2011.12.27
B	ECN NO.S130725	YF	2014.08.13
C	ECN NO.S141055	JF	2015.01.23

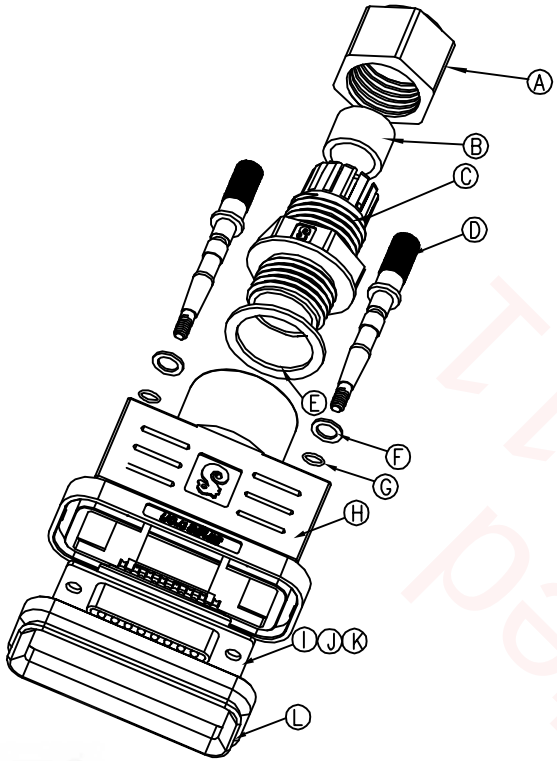

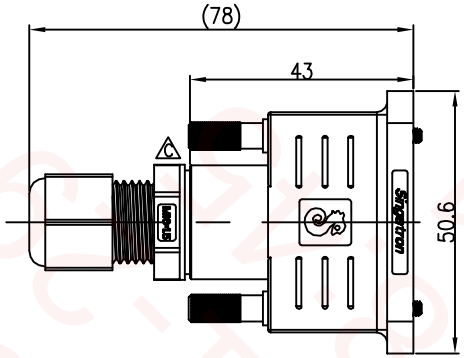

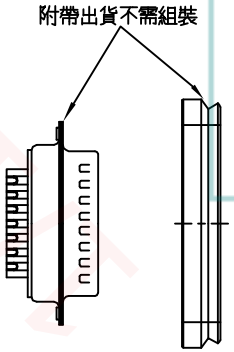

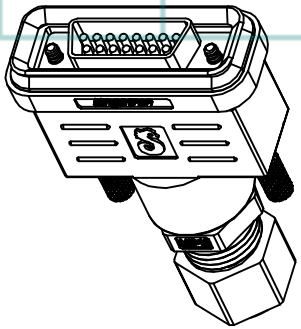

文員	DCC(SZ)	陳環環	2015/01/28 16:28:32

NO	DESCRIPTION	QTY	MATERIAL	PLATING & COLOR
L	GASKEY	1	EPDM	BLACK
K	MALE PIN	15	Brass	(1~3)u" GOLD PLATING OVER NICKEL PLATING
J	INSULATOR	2	PBT	BLACK
I	SHELL	2	COLD ROLLER STEEL	NICKEL PLATING 60u"
H	HOUSING	1	ABS 765A UL94V-0	BLACK
G	O-RING 3	2	SILICONE	CLEAR
F	O-RING 2	2	EPDM	BLACK
E	O-RING 1	1	SILICONE	BLACK
D	SCREW	2	HBi59-1.5B	NICKEL PLATING 100u"
C	CLAMP RING	1	PC	BLACK
B	SEAL	1	EPDM	BLACK
A	SEALING NUT	1	PC	BLACK

PACKAGING

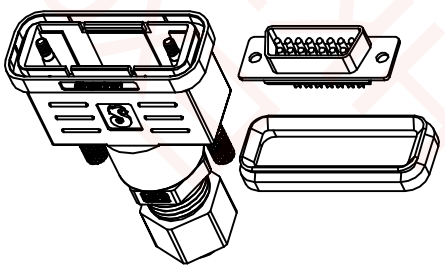

NOTES:
1. WATERPROOF RATE: IP67
   IP67: IMMERSED IN 1M WATER FOR 30 MINUTES
2. FOR CABLE OD:ø6.0mm~ø9.0mm
3. CURRENT RATING: 5A
4. SPECIFICATIONS:SEE "D-SUB SERIES SPECIFICATIONS".
5. TO CONFORM TO SINGATRON HAZARDOUS SUBSTANCE FREE SPEC.
6. GREEN PRODUCT IDENTIFICATION LABEL ON PACKAGING: G.P. PASS

UNLESS OTHERWISE SPECIFED TOLERANCES

DECIMALS: X :±0.5, X.X :±0.3, X.XX :±0.2

ANGLES: X :±2°, X.X :±1°

Singatron Enterprise Co., Ltd.
信音企業股份有限公司

TITLE	D-Sub (IP67) MALE CONN. MALE 15 PIN SCTEW TYPE			
DWN	JF	PART NO.2DS3001-W15300H		
CHKD	Harlen	SCALE 1:1	UNIT: mm	
APVD	Steve	SIZE: A3	SHEET:1 OF 1	REV: C

CUSTOMER COPY

文件編號RD-06-043-A