REV.	ECN NO OR DESCRIPTION	REVISED	DATE
A	PDR NO.:T220414-1F	JAY	2024.07.31

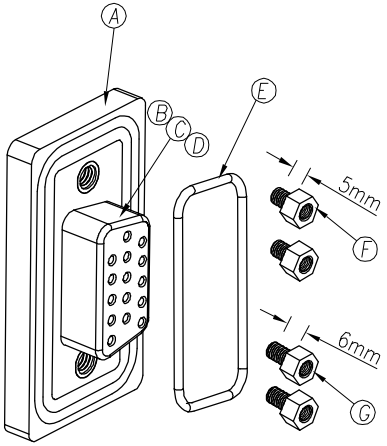

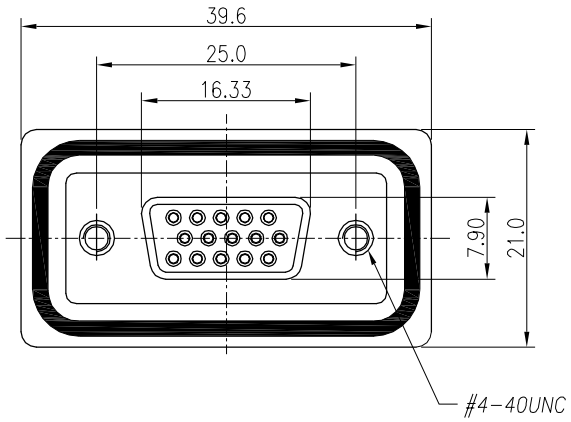

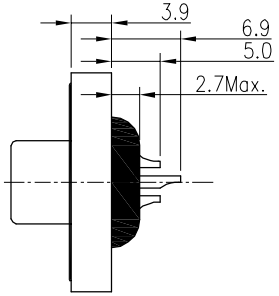

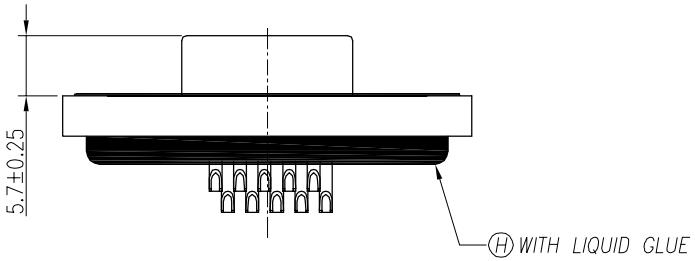

NOTES:

1. WATERPROOF GRADE: IP68(WHEN PROPERLY MATED)
   IP68: IMMERSED IN 1M OF WATER FOR 24 HOURS
2. DO MATING TEST AFTER GLUED
3. SIGNAL CONTACT CURRENT RATING: 2.0 AMPS.
4. VOLTAGE RATING: 120V AC.
5. DIELECTRIC WITHSTANDING VOLTAGE: AC 1000V R.M.S
6. IINSULATION RESISTANCE: 100MΩ Min. MEASURED BY 500V DC
7. CONTACT RESISTANCE: 25 mΩ Max.
8. OPERATING TEMPERATURE: -40°C TO+105°C.
9. OTHER GENERAL SPEC. TO REFER "D-SUB SERIES SPEC".
10. TO CONFORM TO SINGATRON HAZARDOUS SUBSTANCE FREE SPEC.
11. GREEN PRODUCT IDENTIFICATION LABEL ON PACKAGING: G.P. PASS

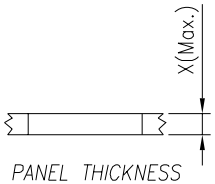

PANEL THICKNESS

SCREW L=5.0 FOR PANEL THICKNESS UNDER 1.2mm

SCREW L=6.0 FOR PANEL THICKNESS BETWEEN 1.2~2.0mm

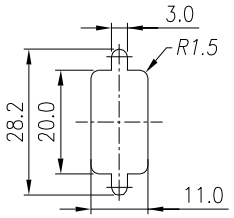

RECOMMENDED PANEL CUT-OUT

NO	DESCRIPTION	QTY	MATERIAL	PLATING & COLOR
H	LIQUID GLUE	1	Epoxy	BLACK
G	SCREW	2	Brass	Ni Plated 80u
F	SCREW	2	Brass	Ni Plated 80u
E	O-RING	1	SILICONE	LIGHT BLUE
D	FEMALE PIN	15	Phosphor Bronze	GOLD PLATED
C	SHELL	2	COLD ROLLER STEEL	NI PLATED
B	INSULATOR	2	PBT	BLACK
A	BODY	1	Nylon+GF	BLACK

UNLESS OTHERWISE SPECIFED TOLERANCES

DECIMALS: X :±0.5, X.X :±0.3, X.XX :±0.2

ANGLES: X :±2°, X.X :±1°

SGconn Waterproof Connectors — Suzhou Singatron Auto Electronics CO.,LTD. 蘇州信音汽車電子有限公司

TITLE	D-SUB 15 PIN FEMALE CONN. FEMALE PIN FOR PANEL SOLDER TYPE			
DWN	JAY	PART NO.2DS3002-W152U0H		
CHKD	MF	SCALE:2:1	UNIT: mm	
APVD	JF	SIZE: A3	SHEET:1 OF 1	REV: A

CUSTOMER COPY

文件編號 RD-06-043-A