REV.	ECN NO OR DESCRIPTION	REVISED	DATE
A	PDR NO:A230202-4A	Elrod	2025.08.05

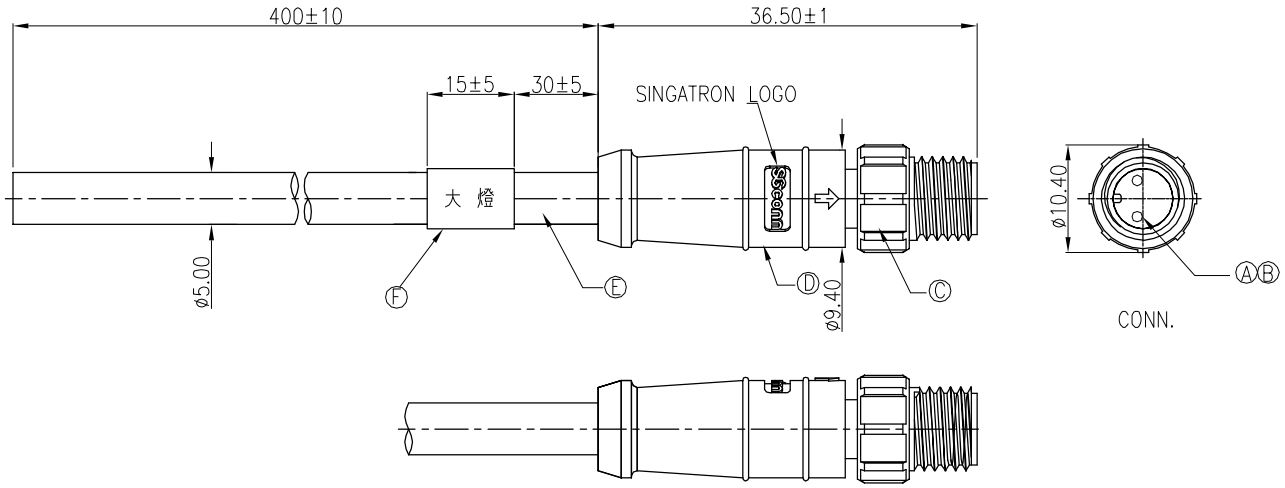

RED	3
BLACK	1
WIRE COLOR	CONN.

PIN DEFINE

CONN.

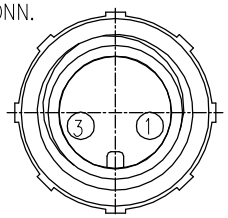

PIN ASSIGNMENTS
FRONT VIEW

NOTES:
1. WATERPROOF RATE:P67
   IP67:IMMERSED IN 1M WATER FOR 30 MINUTES
2. ELECTRICAL CHARACTERISTICS:
   2-1 CURRENT RATING: 5 AMPS.
   2-2 CONTACT RESISTANCE: 3 Ohm Max.
   3-3 INSULATION RESISTANCE: 100 MOhm Min. at 500VDC.
   4-4 BREAKDOWN VOLTAGE: 500 VAC PER MINUTE.
3. ENVIRONMENTAL:
   3-1 OPERATING TEMPERATURE: -20°C TO +80°C.
4. LIFE TEST: 1,000 CYCLES MIN.
5. OTHER GENERAL SPEC. TO REFER "M8 SENSOR CONNECTOR SERIES SPEC.".
6. FOR TECHNICAL DATA REFER TO YOUR LOCAL SINGATRON ELECTRONICS SALES OFFICE.
7. ALL DIMENSIONS ARE NOMINAL FOR REFERENCE ONLY UNLESS OTHERWISE STATED.
8. TO CONFORM TO SINGATRON HAZARDOUS SUBSTANCE FREE SPEC.
9. GREEN PRODUCT IDENTIFICATION LABEL ON PACKAGING: G.P. PASS.

NO	DESCRIPTION	QTY	MATERIAL	PLATING & COLOR
F	TUBE	1	125° 600V	WHITE
E	CABLE	1	UL2464 20AWG*2C+AL (UV) OD5.0	BLACK(PVC JACKET)
D	MOLDING	1	TPU	BLACK
C	NUT	1	PA66+GF	BLACK
B	MALE PIN	2	BRASS	GOLD PLATING OVER NICKEL PLATING
A	BODY	1	TPU	BLACK

UNLESS OTHERWISE SPECIFED TOLERANCES

DECIMALS: X :±0.5, X.X :±0.3, X.XX :±0.2

ANGLES: X :±2°, X.X :±1°

SGconn Waterproof Connectors — Suzhou Singatron Auto Electronics Co.,Ltd. 蘇州信音汽車電子有限公司

TITLE	M8 SERIES MALE CONN. (2PIN)			
DWN	Elrod	PART NO.	2ME3012-W02326H	
CHKD	ALLEN	SCALE 2:1	UNIT: mm	
APVD	LIAO	SIZE: A3	SHEET:1 OF 1	REV: A

CUSTOMER COPY

File No:RD-06-043-A