REV.	ECN NO OR DESCRIPTION	REVISED	DATE
A	PDR NO.: S201030-1A	Kesheng	2021.09.02
B	ECN NO.: S202211-R16 B	Kesheng	2023.03.13

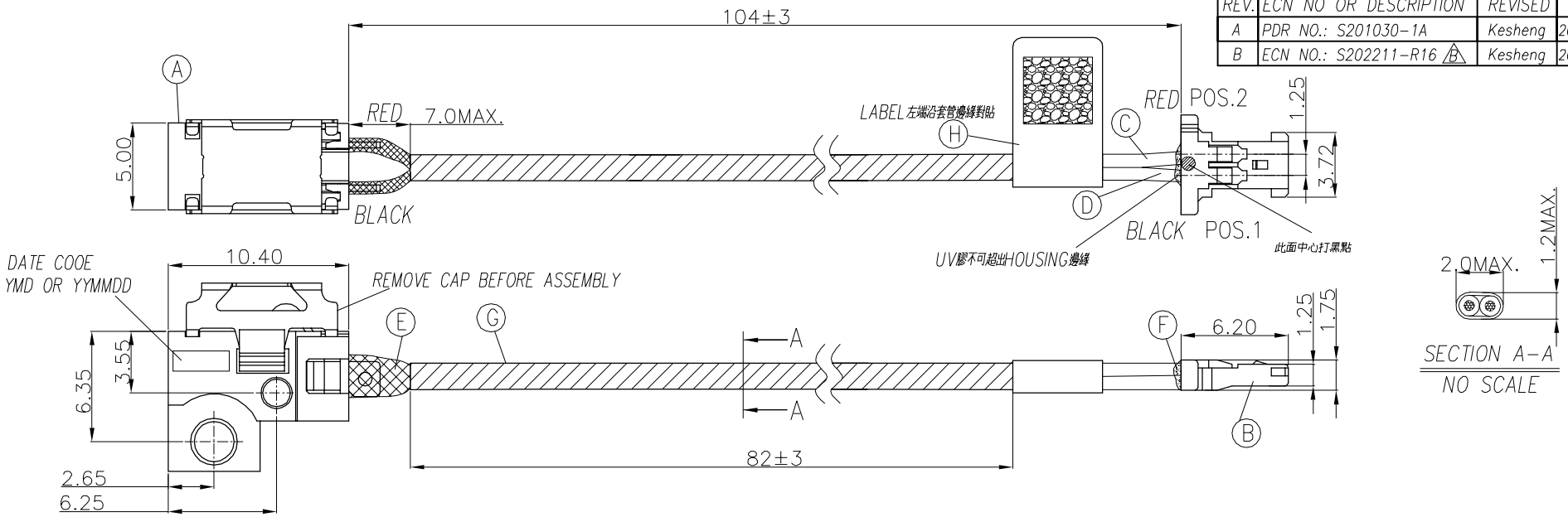

SECTION A-A
NO SCALE

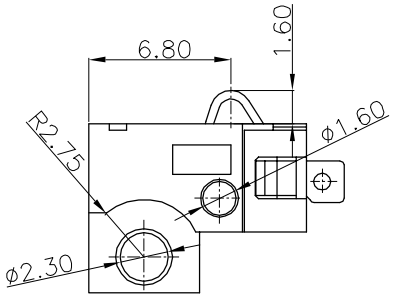

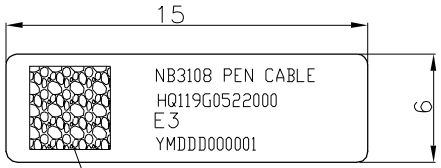

二維碼生成內容為：

HQ119G0522000YMDDD000001

- 5位流水碼 規則：00000-99999
- 6位日期班別和模具代碼：
  規則：年月日，如6325D1
  6表示16年
  3表示3月份，10/11/12月份用A/B/C代替
  25表示25號生產
  D表示白班，N表示夜班
  1表示第一套模具，一次類推（無模具信息用0標示）
- 十三位客戶料號

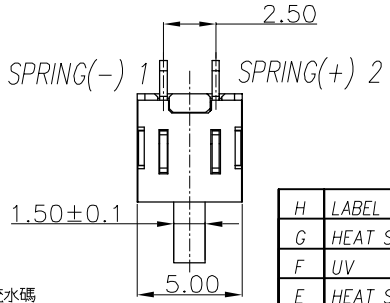

WIRE DIAGRAM		
WIRE TO BOARD CONNECTOR	WIRE	BATTERY
POS.1	BLACK (UL10064 28AWG)	SPRING(-) 1
POS.2	RED (UL10064 28AWG)	SPRING (+) 2

NO	DESCRIPTION	QTY	MATERIAL	PLATING & COLOR
H	LABEL	1	L15*W6	WHITE
G	HEAT SHRINK TUBE	1	ϕ1.0(125°,300V) VW-1	BLACK
F	UV	1	8860 匯建電子	WHITE
E	HEAT SHRINK TUBE	2	ϕ1.6(125°,600V) VW-1	BLACK
D	WIRE	1	UL10064#28AWG (VW-1/105°,30V)	BLACK
C	WIRE	1	UL10064#28AWG (VW-1/105°,30V)	RED
B	WIRE TO BOARD CONN. (ACES_50280-002)	2	PHOSPHOR BRONZE	G/F 0.5u
		1	NYLON66 UL94V-0	WHITE
A	BATTERY	1	SINGATRON BATTERY P/N:2BA3075-002111F	

SPECIFICATIONS:

1. BATTERY AND WIRE SPEC:
   1-1.RATING:1A;
   1-2.DIELECTRIC WITHSTANING VOLTAGE:500V AC FOR ONE MINUTE.
   1-3.CONTACT RESISTANCE:50mΩ MAX.(ONLY FOR BATTERY)
   1-4.NORMAL FORCE 80gf (FOR WORKING TRAVEL 0.65mm)
   1-5.LIFT TEST:5000 CYCLES MIN.
2. OTHER GENERAL SPEC. REFER TO "2BW3075-001111F SPEC".
3. TO CONFORM TO SINGATRON HAZARDOUS SUBSTANCE FREE SPEC.
4. HALOGEN FREE PRODUCT IDENTIFICATION MARK ON PRODUCT:
5. HALOGEN FREE PRODUCT IDENTIFICATION LOGO ON PACKAGING:

UNLESS OTHERWISE SPECIFED TOLERANCES

DECIMALS: X :±0.5, X.X :±0.3, X.XX :±0.2

ANGLES: X :±2°, X.X :±1°

Singatron Enterprise Co., Ltd.
信音企業股份有限公司

TITLE	B BATTERY WITH WIRE HARNESS			
DWN	Kesheng	PART NO. 2BW3075-001111F		
CHKD	Lussen	SCALE: --	UNIT: mm	
APVD	Liao	SIZE: A3	SHEET:1 OF 1	REV:B

CUSTOMER COPY

文件編號 RD-06-043-A