REV.	ECN NO OR DESCRIPTION	REVISED	DATE
A	PDR NO.:A181017-3A	TZ	2018.11.12.

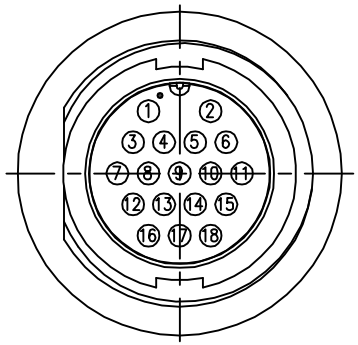

PIN ASSIGNMENTS
FRONT VIEW

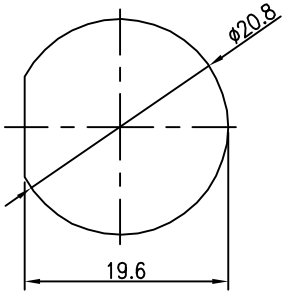

RECOMMENDED PANEL CUT-OUT

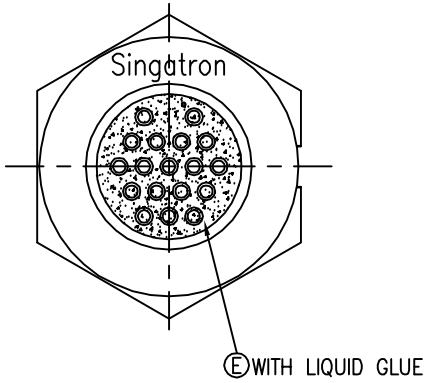

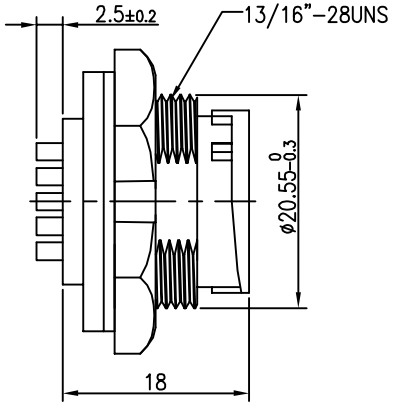

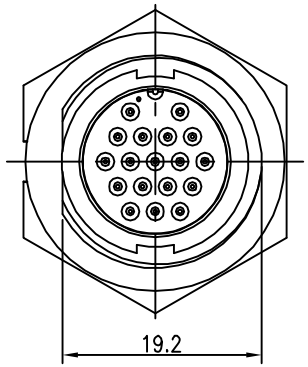

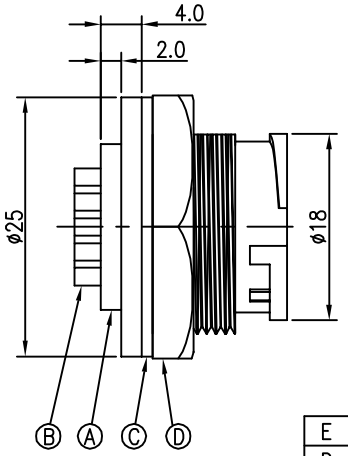

NOTES:
1. WATERPROOF RATE: IP67
   IP67: IMMERSED IN 1M WATER FOR 30 MINUTES
2. ELECTRICAL CHARACTERISTICS
   TEMPERATURE RANGE: -40°C TO +100°C
   CURRENT RATING: 2A
   DIELECTRIC WITHSTANDING VOLTAGE: 500V AC FOR ONE MINUTE
3. SPECIFICATIONS:SEE "CIRCULAR SERIES SPECIFICATIONS".
4. TO CONFORM TO SINGATRON HAZARDOUS SUBSTANCE FREE SPEC.
5. GREEN PRODUCT IDENTIFICATION LABEL ON PACKAGING: G.P. PASS
6. FOR PANEL THICKNESS MAX OF 3.5mm

NO	DESCRIPTION	QTY	MATERIAL	PLATING & COLOR
E	LIQUID GLUE	1	N/A	BLACK
D	NUT	1	PA66+GF	BLACK
C	GASKET	1	EPDM	BLACK
B	MALE PIN	18	BRASS	1~3u" GOLD PLATED OVER NICKEL PLATING
A	BODY	1	PA66+GF	BLACK

UNLESS OTHERWISE SPECIFED TOLERANCES

DECIMALS: X :±0.5, X.X :±0.3, X.XX :±0.2
ANGLES: X :±2°, X.X :±1°

Singatron Enterprise Co., Ltd.
信音企業股份有限公司

TITLE	CIRCULAR MIDDLE SIZE (PCB/LOCK TYPE) MALE CONN. MALE 18 PIN(2A)		
DWN	TZ	PART NO.2CM3002-W18200H	
CHKD	Cerry	SCALE 2:1	UNIT: mm
APVD	William	SIZE: A3	SHEET:1 OF 1 REV: A

CUSTOMER COPY

文件編號 RD-06-043-A