REV.	ECN NO OR DESCRIPTION	REVISED	DATE
A	PDR NO:T091105-4A	HARLEN	2009.11.13
B	ECN NO.:S141261 (B)	LIN	2015.04.07

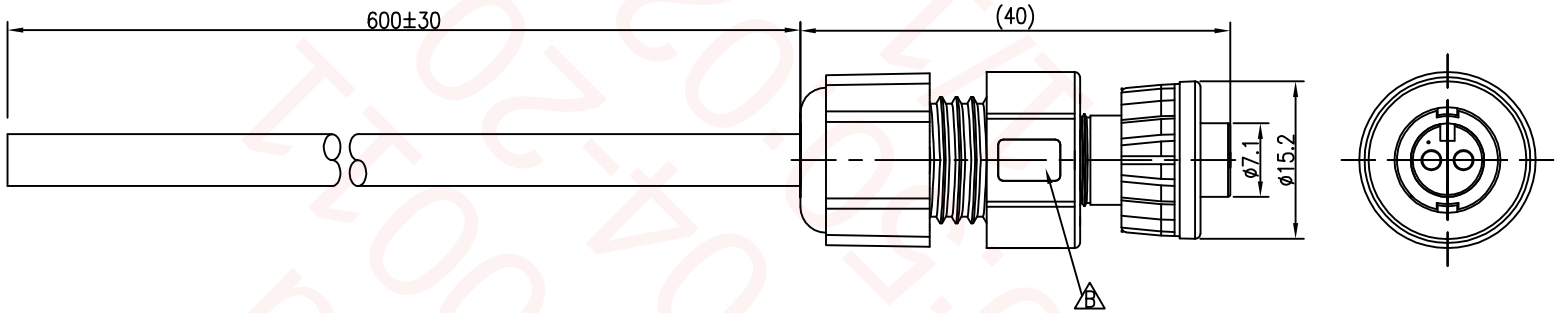

PIN ASSIGNMENTS
FRONT VIEW

WIRECOLOR	CONN.
GREEN	2
RED	1

PIN OUT

NOTES:
1. WATERPROOF RATE: IP67
   IP67: IMMERSED IN 1M WATER FOR 30 MINUTES
2. SPECIFICATIONS:SEE "CIRCULAR SERIES SPECIFICATIONS".
3. TO CONFORM TO SINGATRON HAZARDOUS SUBSTANCE FREE SPEC.
4. GREEN PRODUCT IDENTIFICATION LABEL ON PACKAGING: G.P. PASS

NO	DESCRIPTION	QTY	MATERIAL	PLATING & COLOR
B	CABLE	1	UL2464 20#*2C+AL UV RESISTANT OD5.0	BLACK
A	CONN.	1	P/N:2CN3032-W02300	BLACK

UNLESS OTHERWISE SPECIFED TOLERANCES

DECIMALS: X :±0.5, X.X :±0.3, X.XX :±0.2
ANGLES: X :±2°, X.X :±1°

Singatron Enterprise Co., Ltd.
信音企業股份有限公司

TITLE	CIRCULAR MINI SIZE (IP67) FEMALE CONN. FEMALE 2PIN(5A) ASSEMBLY TYPE		
DWN	LIN	PART NO.2CN3032-W02302	
CHKD	Yang	SCALE 2:1	UNIT: mm
APVD	Harlen	SIZE: A3	SHEET:1 OF 1 REV: B

CUSTOMER COPY

文件編號 RD-06-043-A

Please purchase PDF Split-Merge on www.verypdf.com to remove this watermark.