REV.	ECN NO OR DESCRIPTION	REVISED	DATE
A	PDR NO:T190716-6A	JAY	2020.06.25
B	ECN NO:S202010-C07 B	RZ	2020.12.03

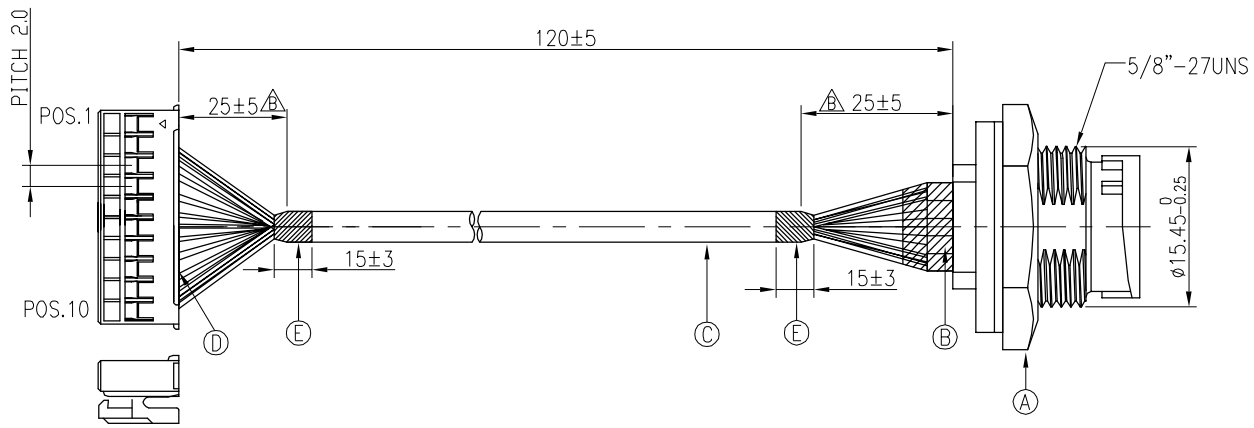

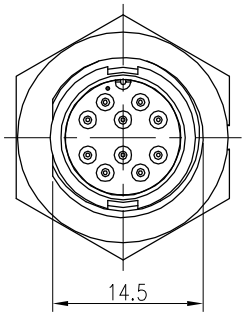

CONN.

WATERPROOF RATE: IP67

NOTES:
1. WATERPROOF RATE: IP67
   IP67: IMMERSED IN 1M WATER FOR 30 MINUTES
2. CURRENT RATING: 2A
3. SPECIFICATIONS:SEE "CIRCULAR SERIES SPECIFICATIONS".
4. TO CONFORM TO SINGATRON HAZARDOUS SUBSTANCE FREE SPEC.
5. GREEN PRODUCT IDENTIFICATION LABEL ON PACKAGING: G.P. PASS
6. FOR PANEL THICKNESS MAX OF 4.0mm

CONN.2	WIRE COLOR	CONN.1
10	ORANGE	10
9	BLACK	9
8	RED	8
7	PINK	7
6	GREY	6
5	YELLOW	5
4	GREEN	4
3	WHITE	3
2	BLUE	2
1	BROWN	1

CONN.2

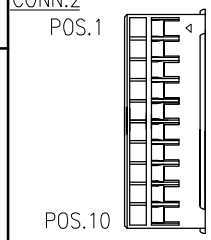

PIN ASSIGNMENTS

CONN.1

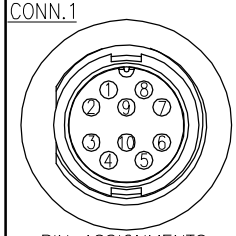

PIN ASSIGNMENTS
FRONT VIEW

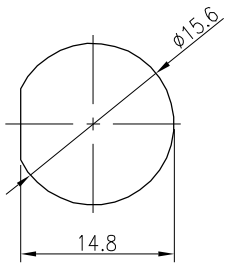

RECOMMENDED PANEL CUT-OUT

NO	DESCRIPTION	QTY	MATERIAL	PLATING & COLOR
E	HEAR SHRINK TUBE	2	300V 125°	BLACK
D	CONNECTOR(TYU)	1	HSG:TU2008HN0-10	WHITE
		10	TER:TU2008TP0-2A	TIN-PLATED
C	CABLE	1	UL2464 26AWG*10C+ Al/My OD5.7mm	BLACK (PVC JACKET)
B	HEAT SHRINK TUBE	10	ø1.5 125° 300V	BLACK
A	CONNECTOR	1	P/N:2CT3002-W10200	BLACK

UNLESS OTHERWISE SPECIFED TOLERANCES

DECIMALS:
X :±0.5
X.X :±0.3
X.XX :±0.2

ANGLES:
X :±2°
X.X :±1°

Suzhou Singatron Auto Electronics CO.,LTD.
蘇州信音汽車電子有限公司

TITLE	CIRCULAR MINI SIZE (SOLDER/LOCK TYPE) MALE CONN. MALE 10PIN (2A)			
DWN	RZ	PART NO.2CT3002-W10218H		
CHKD	Cerry	SCALE 2:1	UNIT: mm	
APVD	William	SIZE: A4	SHEET:1 OF 1	REV: B

CUSTOMER COPY

文件編號 RD-06-043-A