REV.	ECN NO OR DESCRIPTION	REVISED	DATE
A	PDR NO:T100610-2A	HARLEN	2010.10.22
B	ECN NO:S110707	HARLEN	2011.8.2
C	ECN NO.:S121109	YF	2014.03.28

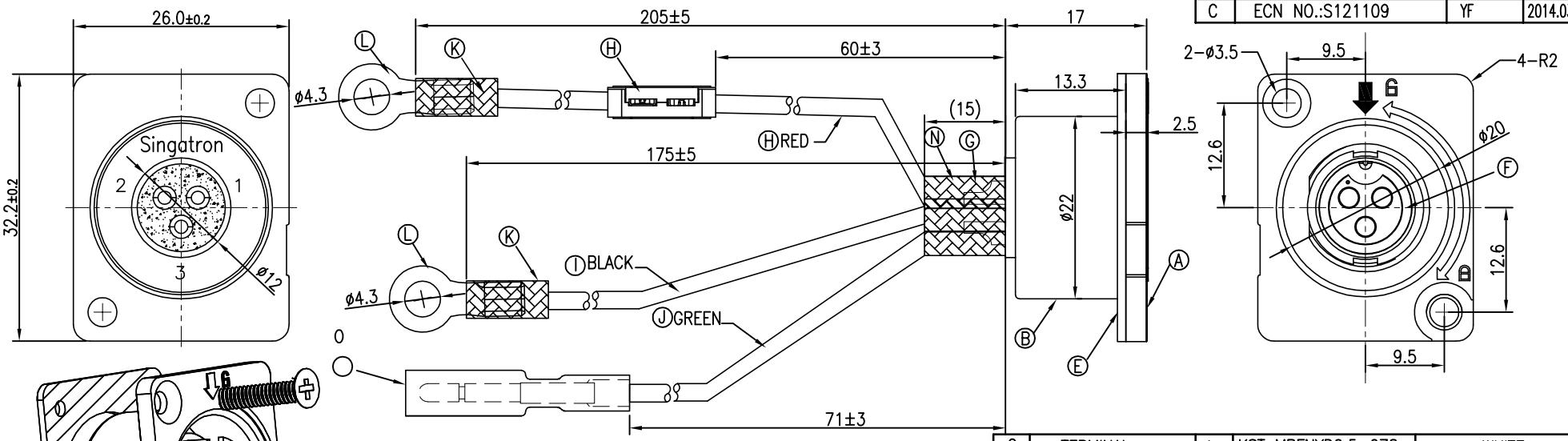

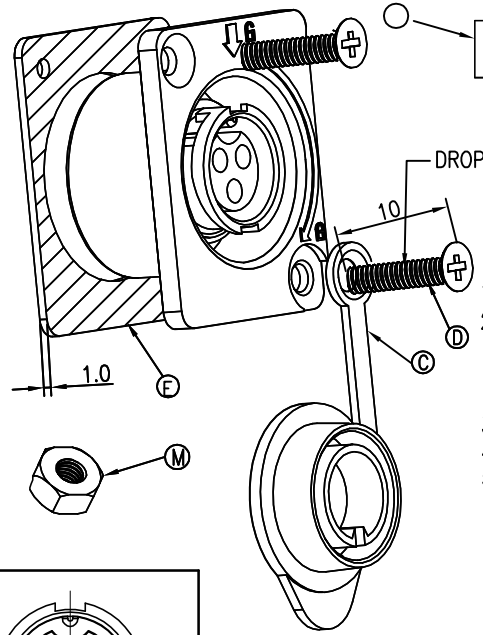

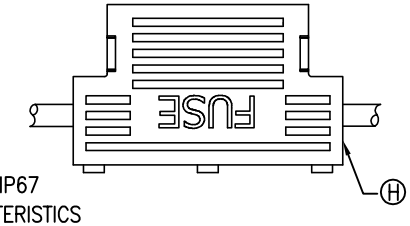

NOTES:

1. WATERPROOF RATE: IP67
2. ELECTRICAL CHARACTERISTICS
   TEMPERATURE RANGE: -20°C TO +80°C
   CURRENT RATING: 10A
   DIELECTRIC WITHSTANDING VOLTAGE: 1000V AC FOR ONE MINUTE
3. SPECIFICATIONS:SEE "CIRCULAR SERIES SPECIFICATIONS".
4. TO CONFORM TO SINGATRON HAZARDOUS SUBSTANCE FREE SPEC.
5. GREEN PRODUCT IDENTIFICATION LABEL ON PACKAGING: G.P. PASS
   螺絲,螺母及防塵蓋以附件形式包裝出貨
7. THE TORQUE OF SCREWING 3.5KGF MAX
8. AFTER 5000CYCLES LIFE TEST OF DUST CAP WITHOUT ANY FRACTURES OR CRACKS OF THE BAD SITUATION.
9. MECHANICAL CHARACTERISTICS:
   INSERTION FORCE: 0.05~2.5Kgf
   WITHDRAWAL FORCE: 0.05~2.5Kgf.
10. E-BIKE DISCHARGE CONNECTOR :
    RATING: 300V DC 10AMP
    CONNECTOR CONTACT RESISTANCE: <20mOhm.
11. FUSH HOLDER : JEF-703S SPEC OR EQU.
12. LIFE TEST: 3000 INSERTION/EXTRACTION CYCLES (NO WATERTIGHT TEST) AND LOCK 500 CYCLES

NO	DESCRIPTION	QTY	MATERIAL	PLATING & COLOR
O	TERMINAL	1	KST MPFNYD0.5-078	WHITE
N	SHRINK TUBE	3	ø3.0*15mm	BLACK
M	NUT	2	STAINLESS STEEL	N/A
L	TERMINAL	2	KST RNBL1-4	TIN PLATING
K	SHRINK TUBE	2	ø4.0*10	BLACK
J	WIRE	1	UL1007 22AWG	GREEN
I	WIRE	1	UL1015 18AWG	BLACK
H	FUSH HOLDER	1	ATU IN-LINE FUSH HOLDER	RED WIRE
G	FEMALE PIN	3	Phosphor Bronze	1u" GOLD PLATING OVER NICKEL PLATING
F	PANEL BODY	1	PA66+30%GF	BLACK
E	GASKET	1	EPDM 70° ADHESIVE	BLACK
D	SCREW	2	STAINLESS STEEL (Drop-resistant)	N/A
C	DUST CAP	1	HYTREL 4056	BLACK
B	LIQUID GLUE	1	N/A	BLACK
A	HOUSING	1	PA66+30%GF	BLACK

PIN ASSIGNMENTS
FRONT VIEW

WIRE COLOR	CONN.
GREEN	3
BLACK	2
RED	1

PIN OUT

UNLESS OTHERWISE SPECIFED TOLERANCES

DECIMALS: X :±0.5, X.X :±0.3, X.XX :±0.2
ANGLES: X :±2°, X.X :±1°

Singatron Enterprise Co., Ltd.
信音企業股份有限公司

TITLE	3PIN POWER SOCKET(10A)		
DWN	YF	PART NO.2CT3020-W034A6	
CHKD	Harlen	SCALE 2:1	UNIT: mm
APVD	Quan	SIZE: A3	SHEET:1 OF 1 REV:C

CUSTOMER COPY

文件編號:RD-06-043-A