REV.	ECN NO OR DESCRIPTION	REVISED	DATE
A	PDR NO:T110906-1A	HARLEN	2011.10.21
B	ECN NO.:S121109	YF	2014.03.28

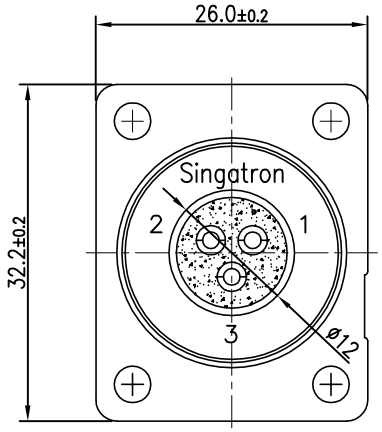

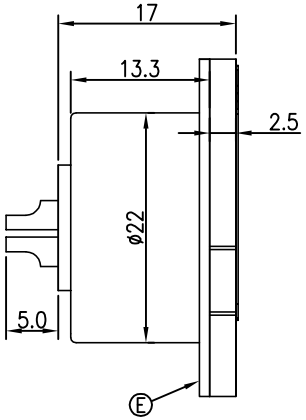

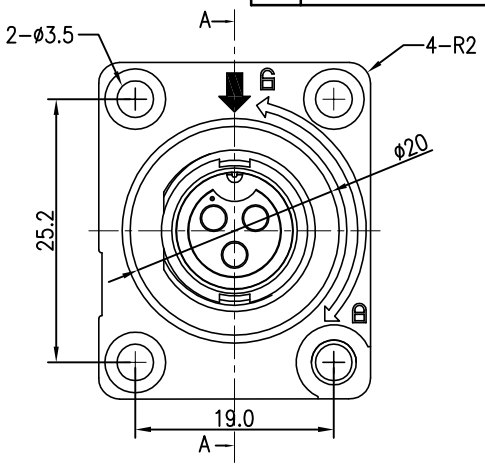

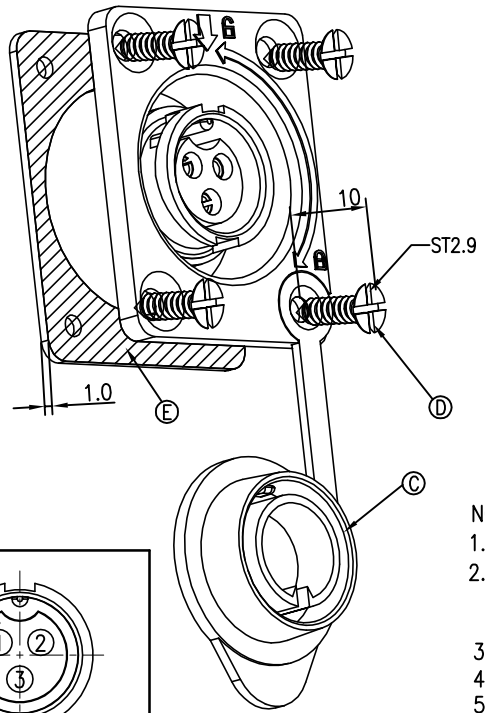

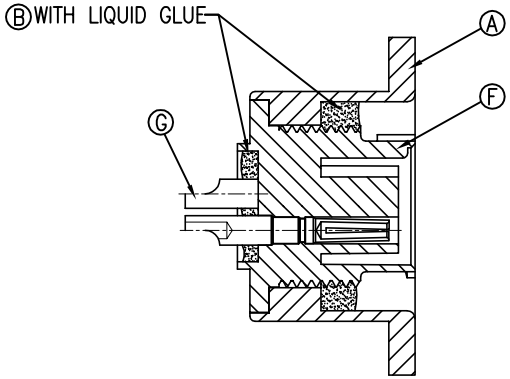

A-A SECTION

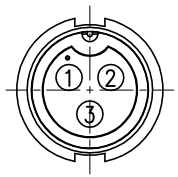

PIN ASSIGNMENTS
FRONT VIEW

NOTES:
1. WATERPROOF RATE: IP55
2. ELECTRICAL CHARACTERISTICS
   TEMPERATURE RANGE: -40°C TO +100°C
   CURRENT RATING: 10A
3. SPECIFICATIONS:SEE "CIRCULAR SERIES SPECIFICATIONS".
4. TO CONFORM TO SINGATRON HAZARDOUS SUBSTANCE FREE SPEC.
5. GREEN PRODUCT IDENTIFICATION LABEL ON PACKAGING: G.P. PASS
6. 螺絲,防塵蓋以附件形式包裝出貨
7. THE TORQUE OF SCREWING 3.5KGF MAX
8. AFTER 5000CYCLES LIFE TEST OF DUST CAP WITHOUT ANY FRACTURES OR CRACKS OF THE BAD SITUATION.

NO	DESCRIPTION	QTY	MATERIAL	PLATING & COLOR
G	FEMALE PIN	3	Phosphor Bronze	1u" GOLD PLATING OVER NICKEL PLATING
F	PANEL BODY	1	PA66+30%GF	BLACK
E	GASKET	1	SILICONE ADHESIVE	BLACK
D	SCREW	4	STAINLESS STEEL	N/A
C	DUST CAP	1	HYTREL 4056	BLACK
B	LIQUID GLUE	1	N/A	BLACK
A	HOUSING	1	PA66+30%GF	BLACK

UNLESS OTHERWISE SPECIFED TOLERANCES

DECIMALS: X :±0.5, X.X :±0.3, X.XX :±0.2
ANGLES: X :±2°, X.X :±1°

Singatron Enterprise Co., Ltd.
信音企業股份有限公司

TITLE	3PIN POWER SOCKET(10A)		
DWN	YF	PART NO.2CT3020-W034D0H	
CHKD	Harlen	SCALE 2:1	UNIT: mm
APVD	Quan	SIZE: A3	SHEET:1 OF 1 REV:B

CUSTOMER COPY

文件編號:RD-06-043-A