REV.	ECN NO OR DESCRIPTION	REVISED	DATE
A	PDR NO.:T140604-2A	Vicky	2014.11.03

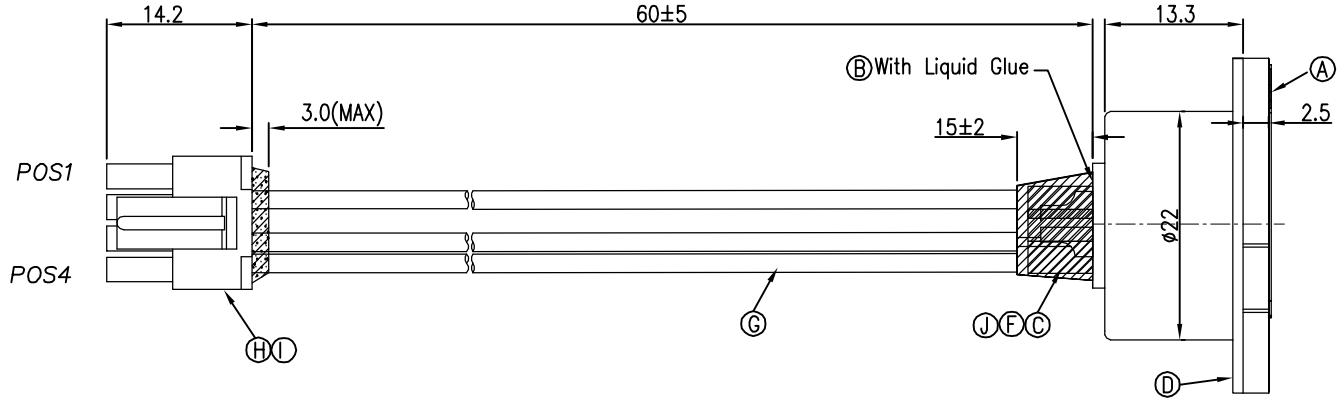

CONN.2

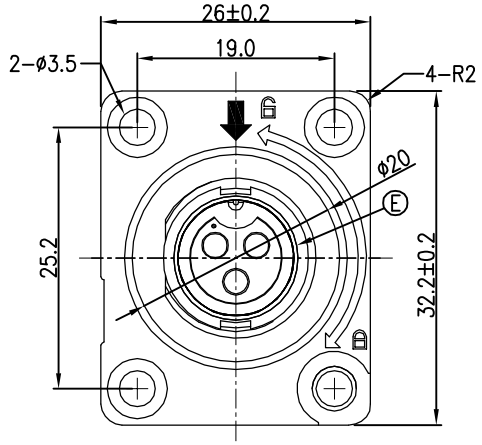

CONN.1

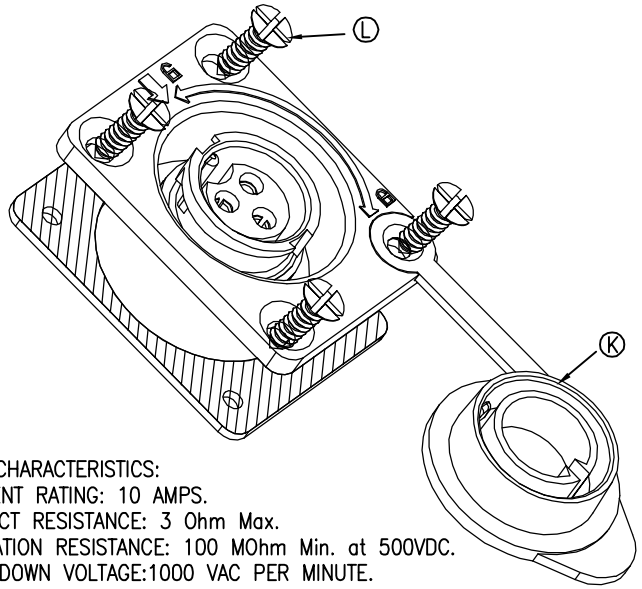

3	YELLOW	3
4	BLACK	2
1	RED	1
CONN.2	WIRE COLOR	CONN.1
PIN OUT		

CONN.1

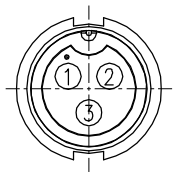

PIN ASSIGNMENTS
FRONT VIEW

NOTES:
1. ELECTRICAL CHARACTERISTICS:
   1-1 CURRENT RATING: 10 AMPS.
   1-2 CONTACT RESISTANCE: 3 Ohm Max.
   1-3 INSULATION RESISTANCE: 100 MOhm Min. at 500VDC.
   1-4 BREAKDOWN VOLTAGE:1000 VAC PER MINUTE.
2. ENVIRONMENTAL:
   2-1 OPERATING TEMPERATURE: -20°C TO +80°C.
   2-2 SEALING REQUIREMENTS: IP65.
3. LIFE TEST: 1,000 CYCLES Min.
4. OTHER GENERAL SPEC TO REFER"CIRCULAR SERIES GENERAL SPEC".
5. FOR TECHNICAL DATA REFER TO YOUR LOCAL SINGATRON ELECTRONICS SALES OFFICE.
6. ALL DIMENSIONS ARE NOMINAL FOR REFERENCE ONLY UNLESS OTHERWISE STATED.
7. TO CONFORM TO SINGATRON HAZARDOUS SUBSTANCE FREE SPEC.
8. 螺絲,防塵蓋以附件形式包裝出貨.
9. GREEN PRODUCT IDENTIFICATION LABEL ON PACKAGING: G.P. PASS .

NO	DESCRIPTION	QTY	MATERIAL	PLATING & COLOR
L	SCREW	4	STAINLESS STEEL	N/A
K	DUST CAP	1	HYTREL	BLACK
J	SHRINK TUBE	3	ø3.5 300V	BLACK
I	UV GLUE	1	N/A	NATURAL
H	CONNACTOR	3	BRASS	TIN PLATING
		1	NYLON66	BLACK
G	WIRE	3	UL1430 24AWG	N/A
F	FEMALE PIN	3	Phosphor Bronze	1u" GOLD PLATING OVER NICKEL PLATING
E	PANEL BODY	1	PA66+30%GF	BLACK
D	GASKET	1	SILICONE ADHESIVE	BLACK
C	THERMAL GLUE	1	OD:7MM	WHITE
B	LIQUID GLUE	2	/	BLACK
A	HOUSING	1	PA66+30%GF	BLACK

UNLESS OTHERWISE SPECIFED TOLERANCES

DECIMALS: X :±0.5, X.X :±0.3, X.XX :±0.2
ANGLES: X :±2°, X.X :±1°

Singatron Enterprise Co., Ltd.
信音企業股份有限公司

TITLE	3PIN POWER SOCKET 10A			
DWN	Vicky	PART NO.2CT3020-W034E4H		
CHKD	Harlen	SCALE 2:1	UNIT: mm	
APVD	Steve	SIZE: A3	SHEET:1 OF 1	REV: A

CUSTOMER COPY

文件編號:RD-06-043-A