REV.	ECN NO OR DESCRIPTION	REVISED	DATE
A	PDR NO. :T150106-3A	Vicky	15.01.06

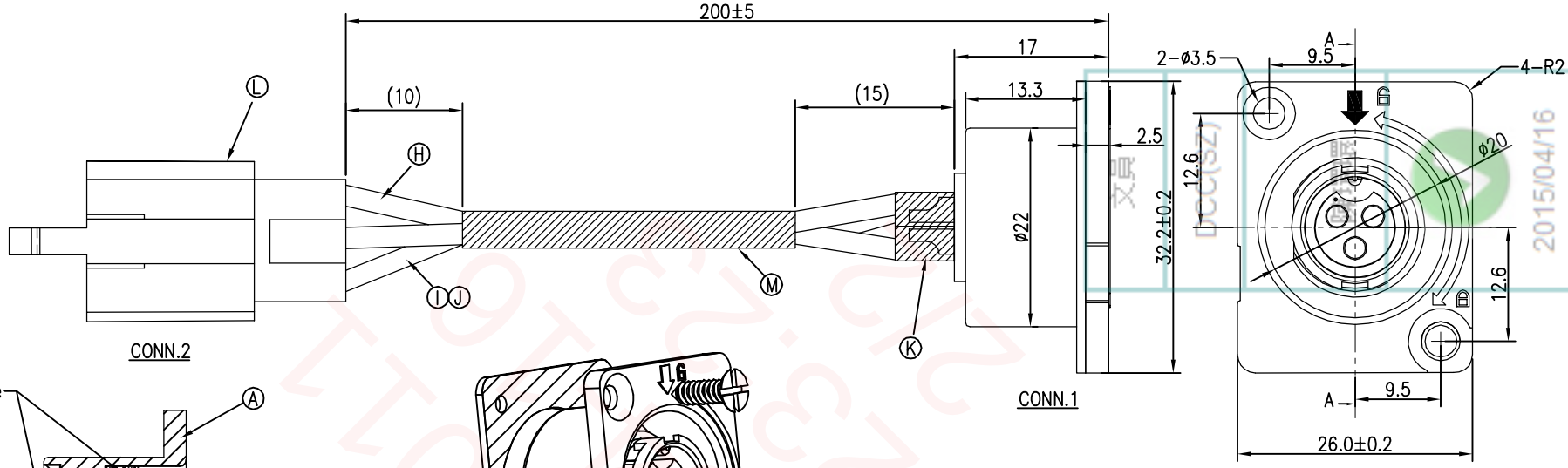

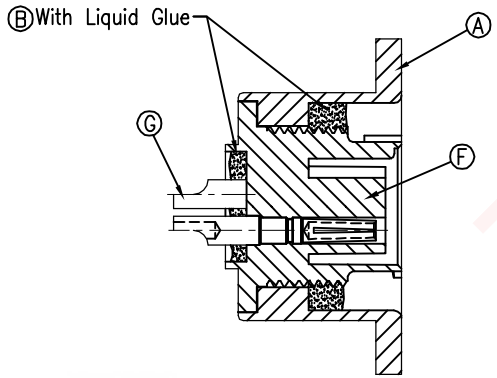

A-A SECTION

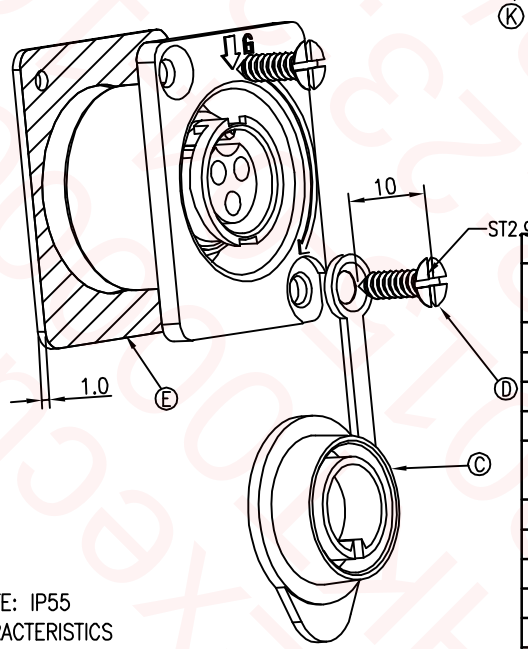

M	HEAT SHRINK TUBE	1	ø6.0	BLACK
L	CONNECTOR	3	BRASS	TIN PLATED
		1	PA66	WHITE
K	HEAT SHRINK TUBE	3	ø3.0*10mm	BLACK
J	WIRE	1	UL1015 18AWG	YELLOW
I	WIRE	1	UL1015 18AWG	BLACK
H	WIRE	1	UL1015 18AWG	RED
G	FEMALE PIN	3	Phosphor Bronze	1u" GOLD PLATING OVER NICKEL PLATING
F	PANEL BODY	1	PA66+30%GF	BLACK
E	GASKET	1	EPDM 70°	BLACK
D	SCREW	2	STAINLESS STEEL	N/A
C	DUST CAP	1	HYTREL 4056	BLACK
B	LIQUID GLUE	1		BLACK
A	HOUSING	1	PA66+30%GF	BLACK
NO	DESCRIPTION	QTY	MATERIAL	PLATING & COLOR

3	YELLOW	3
2	BLACK	2
1	RED	1
CONN.1	WIRE COLOR	CONN.2

PIN OUT

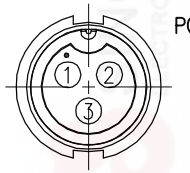

PIN ASSIGNMENTS
FRONT VIEW

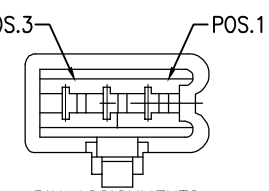

PIN ASSIGNMENTS
FRONT VIEW

NOTES:
1. WATERPROOF RATE: IP55
2. ELECTRICAL CHARACTERISTICS
   TEMPERATURE RANGE: -20°C TO +80°C
   CURRENT RATING: 10A
   DIELECTRIC WITHSTANDING VOLTAGE: 1000V AC FOR ONE MINUTE
3. SPECIFICATIONS:SEE "CIRCULAR SERIES SPECIFICATIONS".
4. TO CONFORM TO SINGATRON HAZARDOUS SUBSTANCE FREE SPEC.
5. GREEN PRODUCT IDENTIFICATION LABEL ON PACKAGING: G.P. PASS
6. 螺絲,防塵蓋以附件形式包裝出貨
7. THE TORQUE OF SCREWING 3.5KGF MAX
8. AFTER 5000CYCLES LIFE TEST OF DUST CAP WITHOUT ANY FRACTURES OR CRACKS OF THE BAD SITUATION.

UNLESS OTHERWISE SPECIFED TOLERANCES

DECIMALS: X :±0.5, X.X :±0.3, X.XX :±0.2
ANGLES: X :±2°, X.X :±1°

Singatron Enterprise Co., Ltd.
信音企業股份有限公司

TITLE	3PIN POWER SOCKET(10A)		
DWN	Vicky	PART NO.2CT3020-W034E9H	
CHKD	Harlen	SCALE 2:1	UNIT: mm
APVD	Steve	SIZE: A3	SHEET:1 OF 1 REV: A

CUSTOMER COPY

文件編號:RD-06-043-A