REV.	ECN NO OR DESCRIPTION	REVISED	DATE
A	PDR NO.:T160325-1A	Yang	2016.12.29

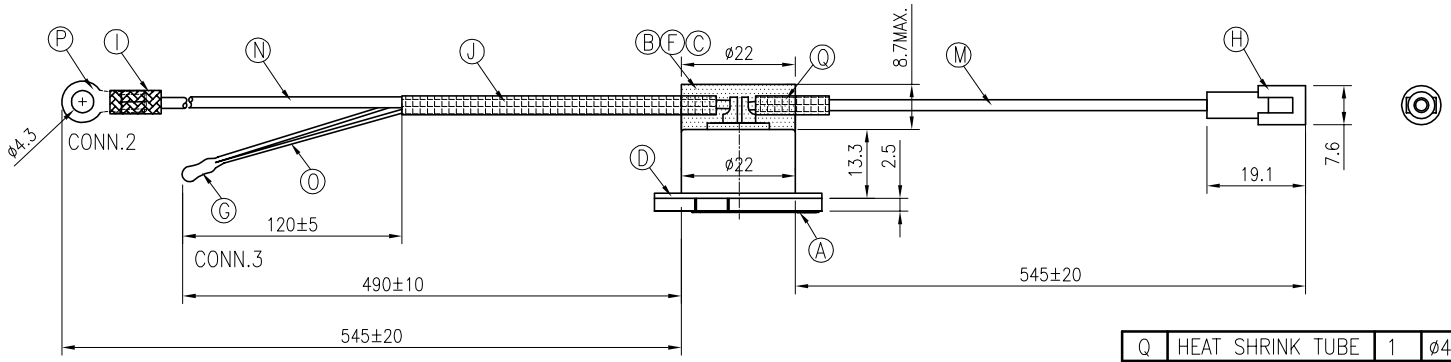

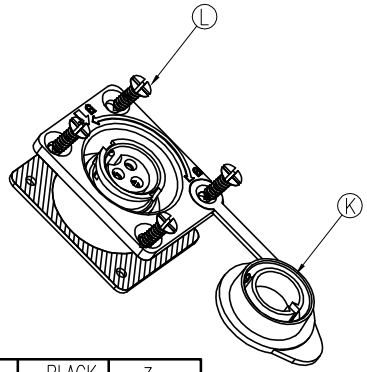

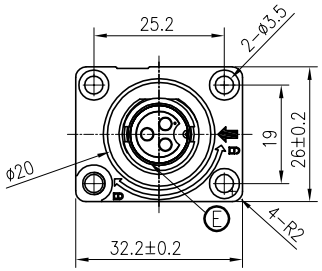

CONN.1

NTC		BLACK	3
NTC	R-TERMINAL	BLACK	2
		RED	1
CONN.3	CONN.2	WIRE	CONN.1
PIN OUT			

CONN.1

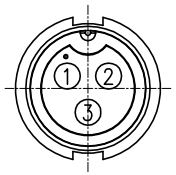

PIN ASSIGNMENTS
FRONT VIEW

NOTES:
1. ELECTRICAL CHARACTERISTICS:
   1-1 CURRENT RATING: 10 AMPS.
   1-2 BREAKDOWN VOLTAGE:1000 VAC PER MINUTE.
2. ENVIRONMENTAL:
   2-1 OPERATING TEMPERATURE: -20°C TO +80°C.
   2-2 SEALING REQUIREMENTS: IP55.
3. LIFE TEST: 1,000 CYCLES Min.
4. OTHER GENERAL SPEC TO REFER"CIRCULAR SERIES GENERAL SPEC".
5. FOR TECHNICAL DATA REFER TO YOUR LOCAL SINGATRON ELECTRONICS SALES OFFICE.
6. ALL DIMENSIONS ARE NOMINAL FOR REFERENCE ONLY UNLESS OTHERWISE STATED.
7. TO CONFORM TO SINGATRON HAZARDOUS SUBSTANCE FREE SPEC.
8. 螺絲,防塵蓋以附件形式包裝出貨
9. GREEN PRODUCT IDENTIFICATION LABEL ON PACKAGING: G.P. PASS.

NO	DESCRIPTION	QTY	MATERIAL	PLATING & COLOR
Q	HEAT SHRINK TUBE	1	ø4.0 125°C 300V	BLACK
P	R-TERMINAL 健和興 RNBL1-4	1	COPPER	TIN PLATING
O	WIRE	2	UL2651 26AWG	BLACK
N	WIRE	1	UL1015 18AWG	BLACK
M	WIRE	1	UL1015 18AWG	RED
L	SCREW	4	STAINLESS STEEL	N/A
K	DUST CAP	1	HYTREL	BLACK
J	HEAT SHRINK TUBE	1	ø4.5 125°C 300V	BLACK
I	HEAT SHRINK TUBE	1	ø4.0 125°C 300V	NATURAL
H	CONNACTOR	1	TERMINAL:A00103BS-2	N/A
		1	HOUSING:P1-A00103	WHITE
G	RES NTC 統達料號(8RNT00050T32)	1	10K/500mm/ SS133-103F343FL50034/ TAYAO/	UL2651/26AWG/ BLACK
F	FEMALE PIN	3	Phosphor Bronze	1u" GOLD PLATING OVER NICKEL PLATING
E	PANEL BODY	1	PA66+GF	BLACK
D	GASKET	1	SILICONE ADHESIVE	BLACK
C	THERMELT	1	867 AMBER COLOR	N/A
B	LIQUID GLUE	1	/	BLACK
A	HOUSING	1	PA66+GF	BLACK

UNLESS OTHERWISE SPECIFED TOLERANCES

DECIMALS: X :±0.5, X.X :±0.3, X.XX :±0.2
ANGLES: X :±2°, X.X :±1°

Singatron Enterprise Co., Ltd.
信音企業股份有限公司

TITLE	3PIN POWER SOCKET 10A		
DWN	Yang	PART NO.2CT3020-W034G2H	
CHKD	Harlen	SCALE 2:1	UNIT: mm
APVD	Steve	SIZE: A3	SHEET:1 OF 1 REV:A

CUSTOMER COPY

文件編號 RD-06-043-A