| REV. | ECN NO OR DESCRIPTION | REVISED | DATE |
|---|---|---|---|
| E | ADD D/C AND UPDATE DWG. | ZK.CHEN | 01/18'07 |
| F | CHANGE MATING&UNMATING FORCE SPEC. ECN NO.C070263 | TANGHUI | 12/18'07 |
| G | CORRECT DRAWING,ECN NO.C080169 | TANGHUI | 2008.09.16 |
| H | ECN NO.C080189 依ECR C080189要求修改圖面與實物相符 | HAIHUA | 2008.12.27 |
| I | 依ECR C090073要求修改圖面與實物相符 (中心PIN平頭改圓頭) | KENSON | 2010.1.30 |

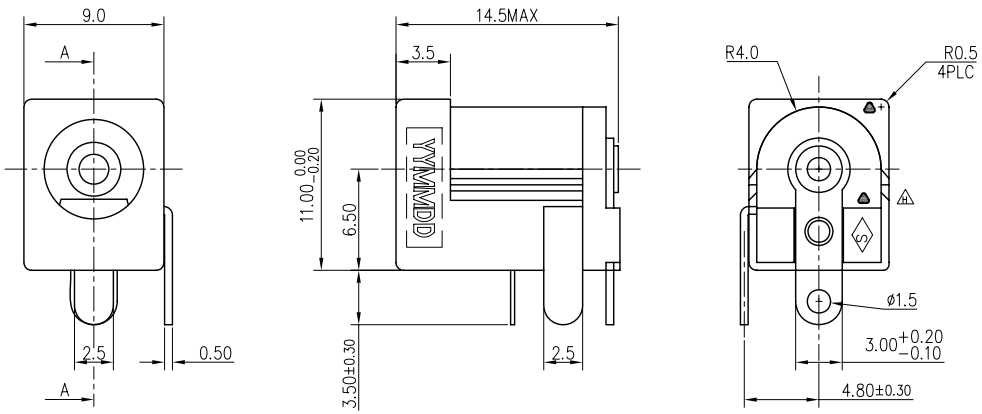


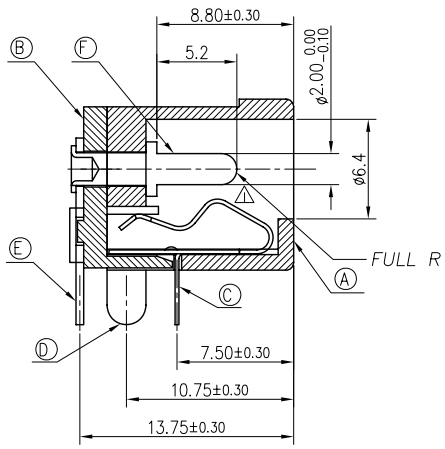


SECTION A–A

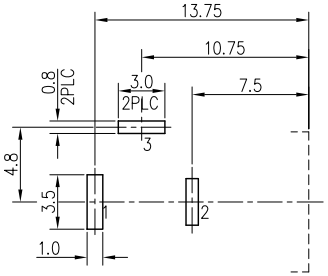


RECOMMENDED PC. BOARD LAYOUT
(TOP VIEW)(TOL. ±0.05)

SPECIFICATION:

1. RATING: 20V DC,4A.
2. MATING FORCE: 0.2Kg~2.5Kg;
   UN–MATING FORCE: 0.2Kg~3.0Kg.
3. INSULATION RESISTANCE BETWEEN ANY ADJACENT TERMINAL SHALL NOT BE LESS THAN 100 MEGOHMS BY 500V.
4. JACK SHALL WITHSTANDING 250V BETWEEN ANY ADJACENT TERMINAL FOR 1 MINUTE.
5. CONTACT RESISTANCE SHALL NOT EXCEED 0.03 OHMS.(INITIAL)
6. DURABILITY 5000CYCLES.
7. MESURING CONDITION:
   TEMPERATURE: 5°~35°;
   RELATIVE HUMIDITY: 40%~80%.
8. ENVIROMENTAL SPECIFICATIONS:
   8.1 HUMIDITY TEST: HUMIDITY 90%~95%, TEMPERATURE 40° ±2° FOR 96 HOURS.
   8.2 HEAT TEST: TEMPERATURE 70° ±2° (HUMIDITY BELOW 50%) FOR 96 HOURS.
   8.3 COLD TEST: TEMPERATURE −40° ±2° FOR 96 HOURS.
9. TO CONFORM TO SINGATRON HAZARDOUS SUBSTANCE FREE SPECIFICATION.
10. GREEN PRODUCUT IDENTIFICATION MARK ON PRODUCT: △
11. GREEN PRODUCUT IDENTIFICATION LABEL ON PACKING: **G.P. PASS**
12. FOR 260°C 10SEC. WAVE SOLDERING LEAD FREE PRODUCT.
13. DATE CODE DESCRIPTION: YYMMDD
    - DAY
    - MONTH
    - YEAR

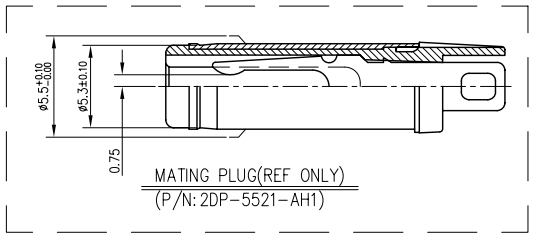


MATING PLUG(REF ONLY)
(P/N: 2DP–5521–AH1)

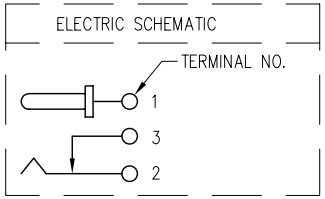


| NO | DESCRIPTION | QTY | MATERIAL | PLATING & COLOR |
|---|---|---|---|---|
| F | PIN | 1 | COPPER ALLOY | Ni 60u"~180u",Cu 80u" MIN. |
| E | TERMINAL | 1 | COPPER ALLOY,0.5T | Ag 20u" MIN.,Ni 50u"~180u" |
| D | SHUNT TERMINAL | 1 | COPPER ALLOY,0.5T | Ag 20u" MIN.,Ni 50u"~180u" |
| C | TIP SPRING | 1 | COPPER ALLOY,0.25T | Ag 20u" MIN.,Ni 50u"~180u" |
| B | COVER | 1 | TERMAL PLASTIC,UL94V–0 | COLOR BLACK |
| A | BODY | 1 | TERMAL PLASTIC,UL94V–0 | COLOR BLACK |

UNLESS OTHERWISE SPECIFED TOLERANCES

DECIMALS: X :±0.5, X.X :±0.3, X.XX :±0.2

ANGLES: X :±2°, X.X :±1°

Singatron Enterprise Co., Ltd.
信音企業股份有限公司

| | | | | |
|---|---|---|---|---|
| TITLE | DC POWER JACK | | | |
| DWN | KENSON | PART NO. 2DC–0005D101 | | |
| CHKD | HAREVY | SCALE 3:1 | UNIT: mm | |
| APVD | ROBIN | SIZE: A4 | SHEET: 1OF1 | REV: I |

CUSTOMER COPY

文件編號:RD–06–043–A