REV.	ECN NO OR DESCRIPTION	REVISED	DATE
A	PRODUCT RELEASE	Kermit	2014.1.20

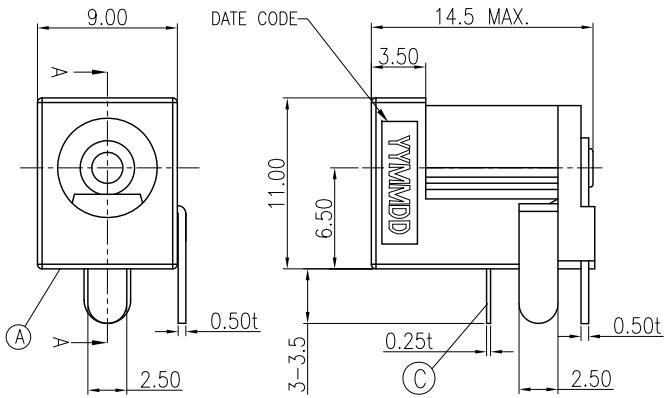

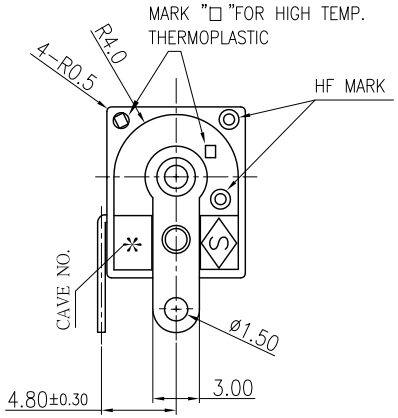

SPECIFICATIONS:

1. RATING: DC 16V 3A
2. INSERTION FORCE: 0.5KG-2.5KG
   WITHDRAWAL FORCE: 0.5KG-3.0KG
3. INSULATION RESISTANCE BETWEEN ANY ADJACENT TERMINALS SHALL NOT BE LESS THAN 100 MEGOHMS BY 500 VOLTS MEGGER.
4. JACK SHALL WITHSTAND 250 VOLTS BETWEEN ANY ADJACENT TERMINAL FOR ONE MINUTE.
5. CONTACT RESISTANCE SHALL NOT EXCEED 0.03 OHMS.
6. JACK SHALL WITHSTAND 5,000 CYCLES OF INSERTION AND WITHDRAWAL WITH TESTING PLUG,AND CONTACT RESISTANCE SHALL NOT EXCEED 0.1 OHMS.
7. MEASURING CONDITION:
   TEMPERATURE: FROM 5°C TO 35°C.
   RELATIVE HUMIDITY: FROM 40% TO 85%.
8. TO CONFORM TO THE SINGATRON HSF SPECIFICATION.
9. HALOGEN FREE PRODUCT IDENTIFICATION MARK ON PRODUCT: ◎
10. OTHER GENERAL SPEC. TO REFER "DC POWER JACK SPEC".
11. HALOGEN FREE PRODUCT IDENTIFICATION LABEL ON PACKAGING:
12. FOR REFLOW SOLDERING LEAD-FREE PROCESS.
13. PACKAGING:TAPE&REEL.
14. PRINTED DATE CODE" YYMMDD" ON TOP OF CONNECTOR.
    DATE CODE: YYMMDD
    - DD: DAY
    - MM: MONTH
    - YY: YEAR

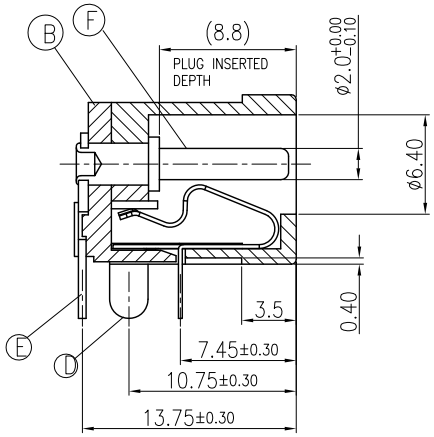

A-A' SECTION

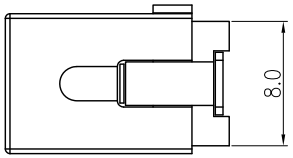

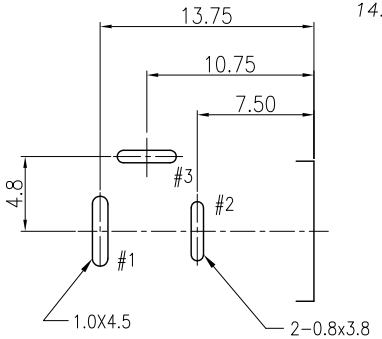

RECOMMENDED PCB LAYOUT
(TOP VIEW)(TOL.:±0.05)

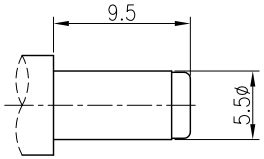

MATE PLUG

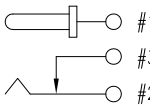

ELECTRICAL CIRCUIT

NO	DESCRIPTION	QTY	MATERIAL	PLATING & COLOR
F	PIN	1	BRASS	NI PLATING,OVER Cu PLATED
E	TERMINAL	1	COPPER ALLOY,0.5T	SILVER PLATING,OVER NI PLATED
D	SHUNT TERMINAL	1	COPPER ALLOY,0.5T	SILVER PLATING,OVER NI PLATED
C	TIP SPRING	1	COPPER ALLOY,0.25T	SILVER PLATING,OVER NI PLATED
B	COVER	1	HI-THERMAL PLASTIC W/ 30%GF.,UL94V-0	BLACK
A	BODY	1	HI-THERMAL PLASTIC W/ 30%GF.,UL94V-0	BLACK

UNLESS OTHERWISE SPECIFED TOLERANCES

DECIMALS: X :±0.5, X.X :±0.3, X.XX :±0.2

ANGLES: X :±2°, X.X :±1°

Singatron Enterprise Co., Ltd.
信音企業股份有限公司

TITLE	DC POWER JACK			
DWN	Kermit14/1/24	PART NO. 2DC-0005D500F		
CHKD	ZJZ 14/1/24	SCALE 3:1	UNIT: mm	
APVD	Liao 14/1/24	SIZE: A3	SHEET: 1OF1	REV: A

CUSTOMER COPY

文件編號 RD-06-043-A