REV.	ECN NO OR DESCRIPTION	REVISED	DATE
A	PRODUCT RELEASE	LONGJIANG	2013.07.18

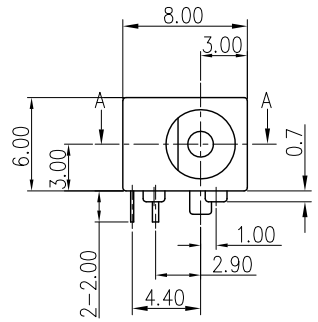

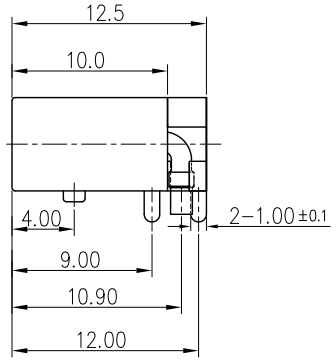

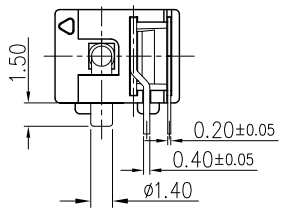

SPECIFICATIONS:

1. ELECTRICAL CHARACTERISTICS:
   1-1. RATING: 30V 2.5A
   1-2. CONTACT RESISTANCE: 30mΩ MAX.(INITIAL)
   1-3. DIELECTRIC WITHSTANDING VOLTAGE: 500V AC FOR ONE MINUTE.
   1-4. INSULATION RESISTANCE: 100MΩ MIN. MEASURED BY 500 VDC
2. MECHANICAL CHARACTERISTICS:
   2-1. INSERTION FORCE : 0.3~3.0 KGF
   2-2. WITHDRAWAL FORCE : 0.3~3.0 KGF
3. LIFE TEST: 5,000 CYCLES MIN.
4. OTHER GENERAL SPEC. TO REFER "DC POWER JACK SPEC".
5. TO CONFORM TO SINGATRON HAZARDOUS SUBSTANCE FREE SPEC.
6. GREEN PRODUCT IDENTIFICATION MARK ON JACK: △
7. GREEN PRODUCT IDENTIFICATION LABEL ON PACKAGING: **G.P. PASS**
8. FOR 260°C 10SEC. WAVE SOLDERING LEAD-FREE PROCESS.

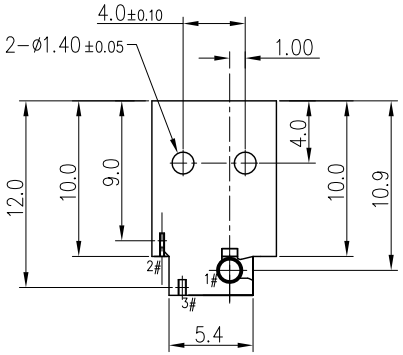

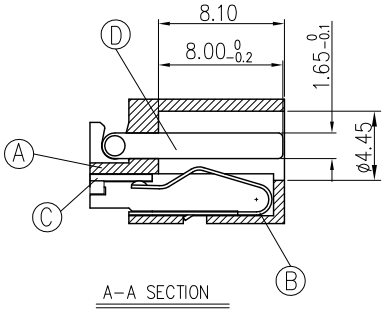

A-A SECTION

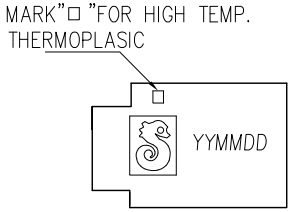

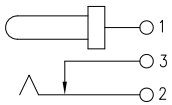

CIRCUIT

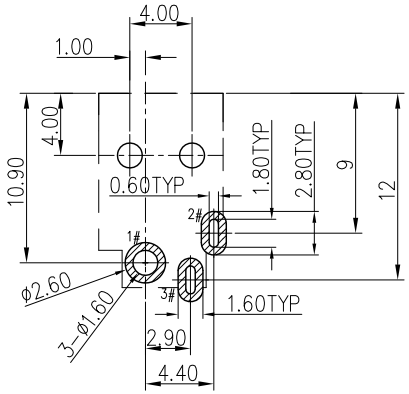

RECOMMENDED P.C.B LAYOUT
TOP VIEW(TOLERANCE:±0.05)

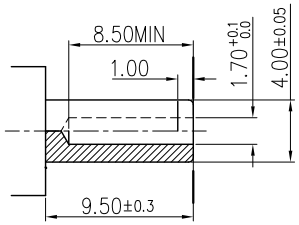

MATE PLUG

NO	DESCRIPTION	QTY	MATERIAL	PLATING & COLOR
D	CONTACT PIN	1	BRASS BAR	NICKEL PLATING
C	SHUNT TERMINAL	1	BRASS 0.4t	SILVER PLATING
B	TIP SPRING	1	COPPER ALLOY 0.2t	SILVER PLATING
A	BODY	1	HI-TEMP.THERMOPLASTIC UL94V-0	BLACK COLOR

UNLESS OTHERWISE SPECIFED TOLERANCES

Singatron Enterprise Co., Ltd.
信音企業股份有限公司

DECIMALS: X :±0.5 X.X :±0.3 X.XX :±0.2

ANGLES: X :±2° X.X :±1°

TITLE	DC POWER JACK			
DWN	Longjiang 13/7/23	PART NO. 2DC-0018-A08H		
CHKD	ZJZ 13/7/23	SCALE 3:1	UNIT: mm	
APVD	Liao 13/7/23	SIZE: A3	SHEET: 1OF1	REV: A

CUSTOMER COPY

文件編號RD-06-043-A