REV.	ECN NO. OR DESCRIPTION	REVISED	DATE
A	ECN NO.T090047	ANGEL	2009.10.12

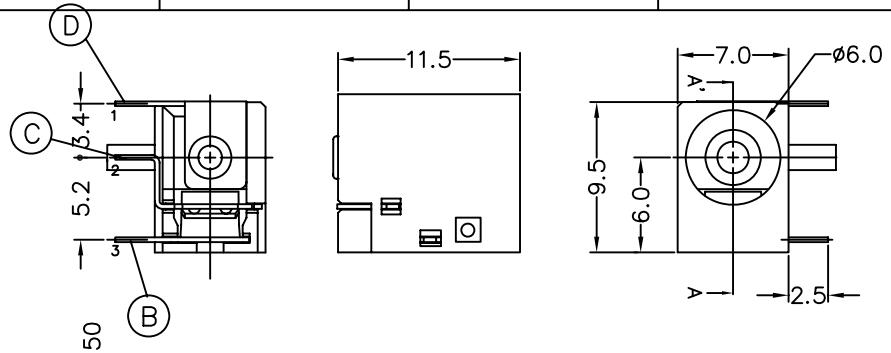

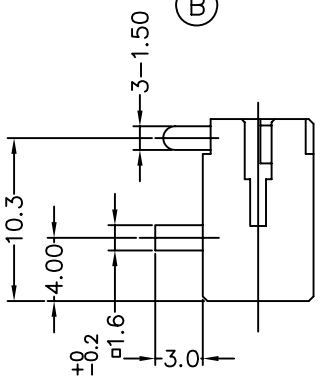

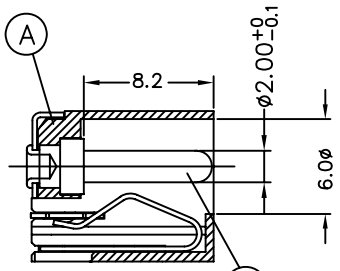

A-A' SECTION

SPECIFICATIONS:

1 1.RATING: DC 24V 4A

2.INSERTION FORCE: 0.4KG-3.0KG
WITHDRAWAL FORCE: 0.4KG-3.0KG

3.INSULATION RESISTANCE BETWEEN ANY ADJACENT TERMINALS SHALL NOT BE LESS THAN 100 MEGOHMS BY 500 VOLTS MEGGER.

4.JACK SHALL WITHSTAND 250 VOLTS BETWEEN ANY ADJACENT TERMINAL FOR ONE MINUTE.

5.CONTACT RESISTANCE SHALL NOT EXCEED 0.03 OHMS.

6.JACK SHALL WITHSTAND 5,000 CYCLES OF INSERTION AND WITHDRAWAL WITH TESTING PLUG,AND CONTACT RESISTANCE SHALL NOT EXCEED 0.1 OHMS.

7.MEASURING CONDITION:
TEMPERATURE: FROM 5°C TO 35°C.
RELATIVE HUMIDITY: FROM 40% TO 85%

8.ENVIRONMENTAL SPECIFICATIONS:
8.1 HUMIDITY TEST: HUMIDITY 90% TO 95% TEMPERATURE 40°C ± 2°C FOR 96 HOURS.
8.2 HEAT TEST: TEMPERATURE 70°C ± 2°C (HUMIDITY BELOW 50%) FOR 96 HOURS.
8.3 COLD TEST: TEMPERATURE -40°C ± 2°C FOR 96 HOURS.

9.SOLDERABILITY TEST: THE TERMINATION IS AT LEAST 95% COVERED BY A CONTINUOUS NEW SOLDER COATING.
TEST CONDITION: DIP IN MOLTEN SOLDER FOR 5 Sec. AT 245±5°C
(TERMINATION SHALL BE IMMERSED IN FLUX BEFORE TEST)

10.TO CONFORM TO SINGATRON HARADOUS SUBSTANCE FREE SPEC

11.GREEN PRODUCT IDENTIFICATION MARK ON JACK:

12.GREEN PRODUCT IDENTIFICATION LABELON PACKAGING: G.P. PASS

13.FOR LEAD-FREE PROCESS.

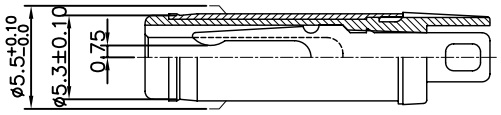

P/N:2DP-5521-AH1

MATING PLUG(REF ONLY)

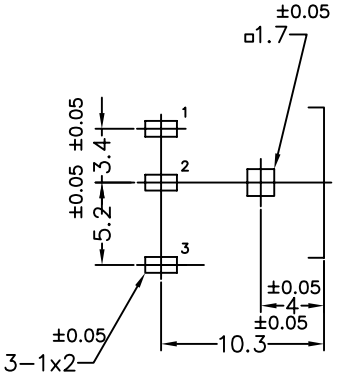

RECOMMENDED P.C.B(T:1.2mm) LAYOUT
TOP VIEW(TOLERANCE ±0.05)

SCHEMATIC

#1 CENTER PIN(+)
#2 SHUNT TERMINAL
#3 TIP SPRING(-)

NO	DESCRIPTION	QTY	MATERIAL	PLATING & COLOR
E	PIN	1	BRASS BAR	Ni 60u" Min Over Cu 80u" Min
D	TERMINAL	1	BRASS STRIP 0.3t	Ni 60u" Min
C	SHUNT TERMINAL	1	BRASS STRIP 0.3t	Ag 20u" Min Over Ni 50u" Min
B	TIP SPRING	1	YCUTM-H 0.3T	Ag 20u" Min Over Ni 50u" Min
A	BODY	1	HIGH TEMP. THERMOPLASTIC UL 94V-0	BLACK

UNLESS OTHERWISE SPECIFED TOLERANCES

DECIMALS: X :±0.5, X.X :±0.3, X.XX :±0.2
ANGLES: X :±2°, X.X :±1°

Singatron Enterprise Co., Ltd.
信音企業股份有限公司

TITLE	DC POWER JACK		
DWN	ANGEL 2009.10.12	PART NO. 2DC-0026D201	
CHKD	LUSEN	SCALE:N/A	UNIT: MM
APVD	QUW	SIZE: A3	SHEET:1 OF 1 REV: A

CUSTOMER COPY

文件編號:RD-06-043-A