REV.	ECN NO OR DESCRIPTION	REVISED	DATE
E	ECN NO: T060325	HONG	2007.1.16
F	ECN:C120324 ADD DIMENSION	DAOWEN	2012.12.27

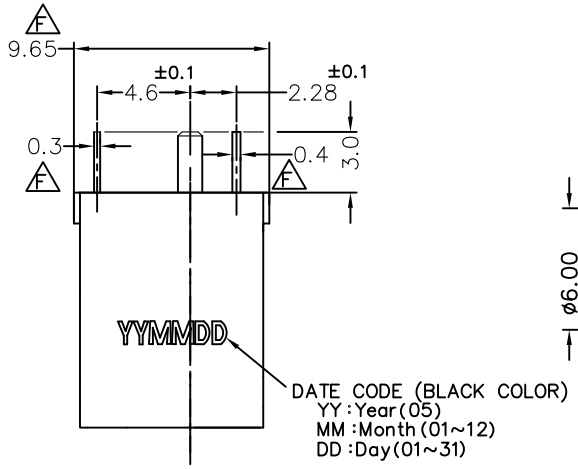

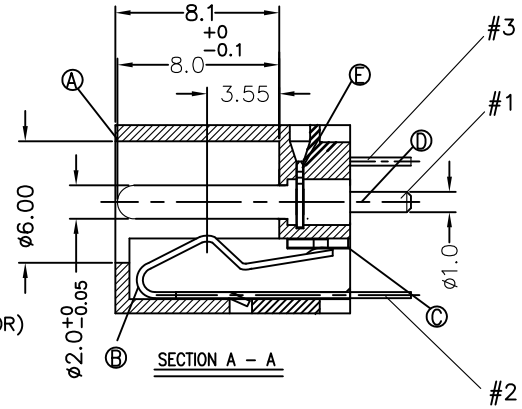

SPECIFICATIONS:

1. RATING: DC 20V 5.5A
2. INSERTION FORCE: 2.5 Kg Max
   WITHDRAWAL FORCE: 1.0Kg~2.5Kg
3. INSULATION RESISTANCE BETWEEN ANY ADJACENT TERMINALS SHALL NOT BE LESS THAN 100 MEGOHMS BY 500 VOLTS MEGGER.
4. JACK SHALL WITHSTAND 500 VOLTS BETWEEN ANY ADJACENT TERMINAL FOR ONE MINUTE.
5. CONTACT RESISTANCE SHALL NOT EXCEED 0.03 OHMS.
6. JACK SHALL WITHSTAND 5,000 CYCLES OF INSERTION AND WITHDRAWAL WITH TESTING PLUG, AND CONTACT RESISTANCE SHALL NOT EXCEED 0.06 OHMS.
7. MEASURING CONDITION:
   TEMPERATURE: FROM 5°C TO 35°C.
   RELATIVE HUMIDITY: FROM 40% TO 85%.
8. PRINTED DATE CODE "YYMMDD" ON TOP OF CONNECTOR.
9. SOLDER HEAT RESISTANCE:PEAK TEMP. 260°C 10 SECS.
10. TO CONFORM TO THE "SE-01-001" & "ROHS DIRECTIVE"
11. GREEN PRODUCT IDENTIFICATION MARK IN JACK: △
12. GREEN PRODUCT IDENTIFICATION LABEL IN PACKING: **G.P. PASS**
13. FOR LEAD-FREE PROCESS.

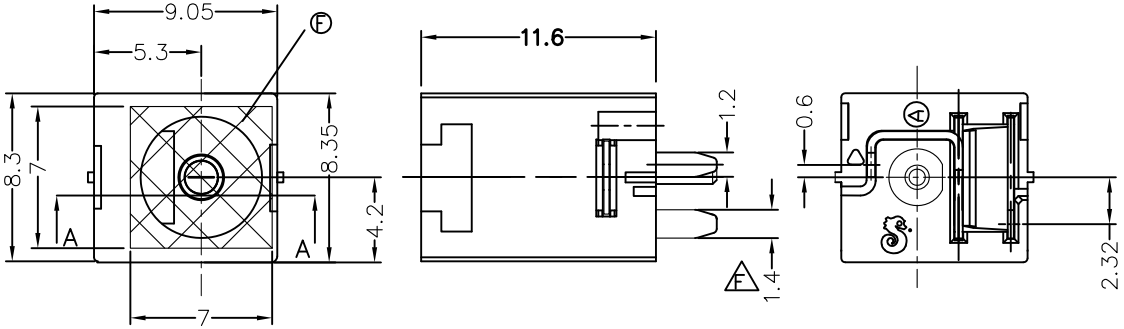

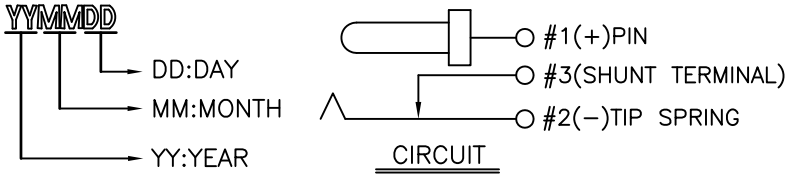

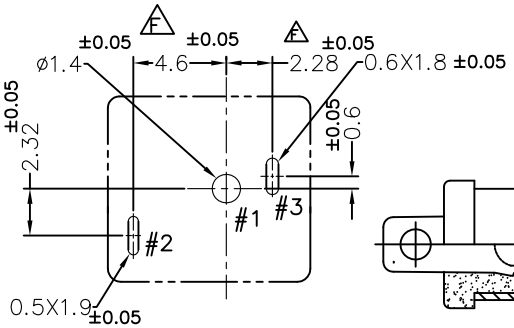

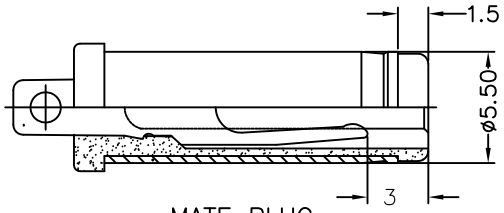

NO	DESCRIPTION	QTY	MATERIAL	PLATING & COLOR
F	MYLAR	1	MYLAR 0.075t	TRANSPARENT
E	TERMINAL	1	SUS301 0.3t	N/A
D	CONTACT PIN	1	BRASS BAR	SILVER PLATING
C	SHUNT TERMINAL	1	BRASS 0.4t	SILVER PLATING
B	TIP SPRING	1	COPPER ALLOY 0.3t	SILVER PLATING
A	BODY	1	HIGHT TEMP.THERMOPLASTIC UL94V-0	BLACK COLOR

UNLESS OTHERWISE SPECIFED TOLERANCES

DECIMALS: X :±0.5, X.X :±0.3, X.XX :±0.2

ANGLES: X :±2°, X.X :±1°

Singatron Enterprise Co., Ltd.
信音企業股份有限公司

TITLE	DC POWER JACK		
DWN	DAOWEN 2012.12.27	PART NO. 2DC-0228D200	
CHKD	Z.JZ 2012.12.28	SCALE:4/1	UNIT: mm
APVD	Z.JZ 2012.12.28	SIZE: A3	SHEET:1 OF 1 REV:F

CUSTOMER COPY

文件編號:RD-06-035-1A