REV.	ECN NO OR DESCRIPTION	REVISED	DATE
B	ECN NO:940134	AMY	2005.06.16

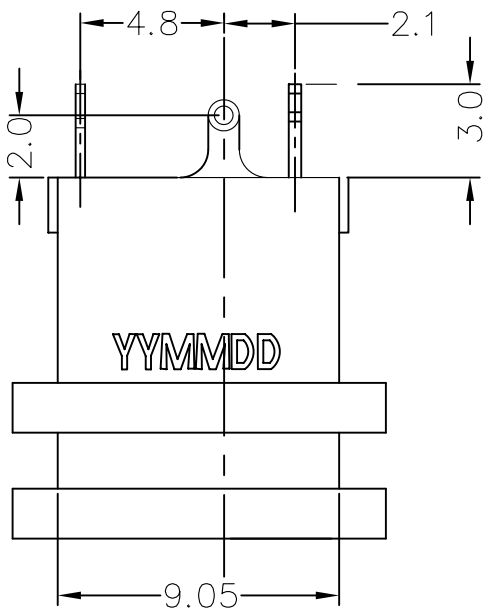

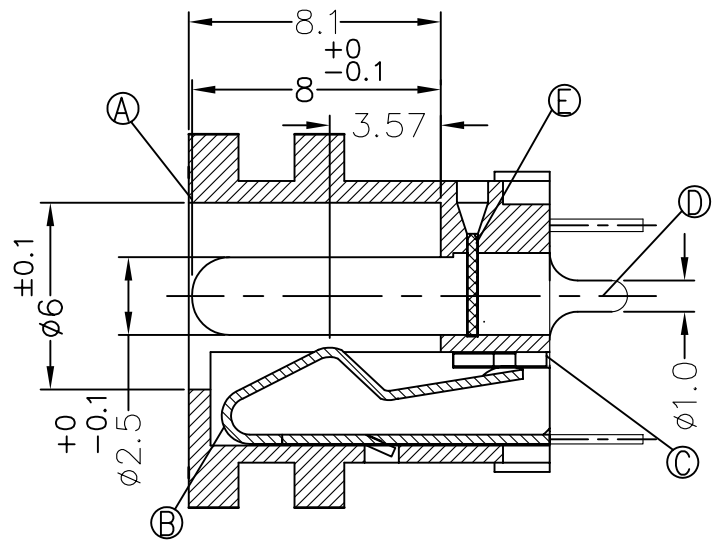

SECTION A – A

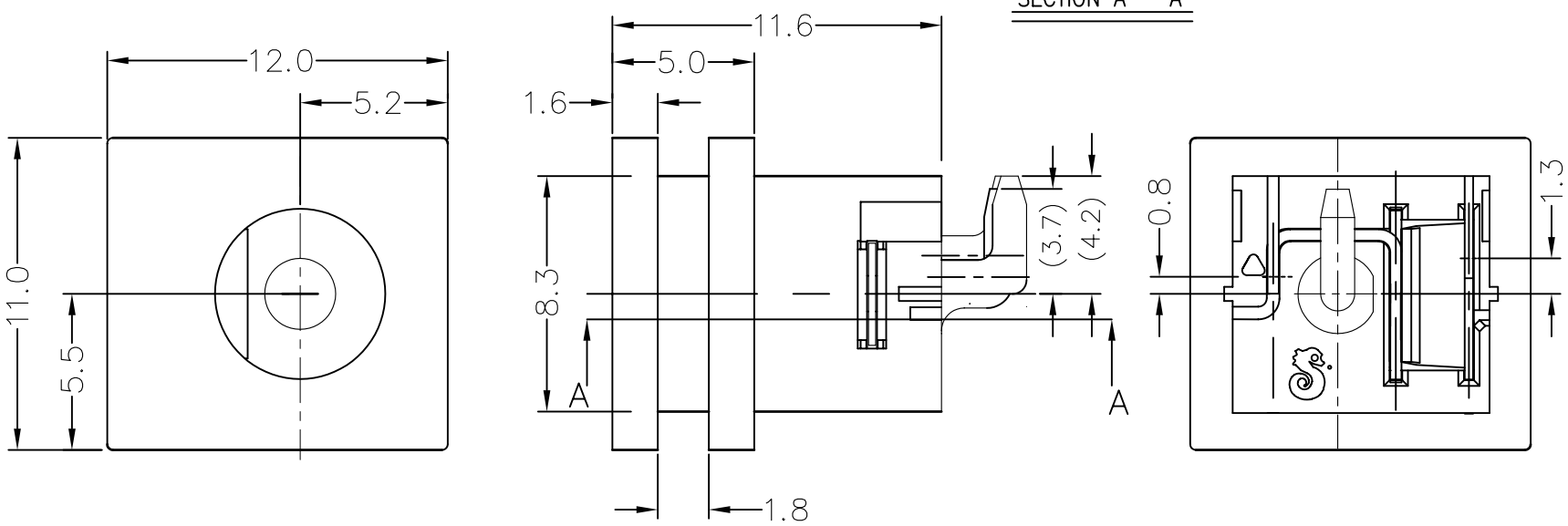

SPECIFICATIONS:

1.RATING: DC 20V 5.5A
2.INSERTION FORCE: 1.0Kg~2.5Kg
WITHDRAWAL FORCE: 1.0Kg~2.5Kg
3.INSULATION RESISTANCE BETWEEN ANY ADJACENT TERMINALS SHALL NOT BE LESS THAN 100 MEGOHMS BY 500 VOLTS MEGGER.
4.JACK SHALL WITHSTAND 500 VOLTS BETWEEN ANY ADJACENT TERMINAL FOR ONE MINUTE.
5.CONTACT RESISTANCE SHALL NOT EXCEED 0.03 OHMS.
6.JACK SHALL WITHSTAND 5,000 CYCLES OF INSERTION AND WITHDRAWAL WITH TESTING PLUG, AND CONTACT RESISTANCE SHALL NOT EXCEED 0.06 OHMS.
7.MEASURING CONDITION:
TEMPERATURE: FROM 5°C TO 35°C.
RELATIVE HUMIDITY: FROM 40% TO 85%.
8.PRINTED DATE CODE"YYMMDD" ON TOP OF CONNECTOR.
9.SOLDER HEAT RESISTANCE: WAVE SOLDERING 260°C 10 SECS.
10.TO CONFORM TO THE "SE-01-001" & "ROHS DIRECTIVE"
11.GREEN PRODUCT IDENTIFICATION MARK IN JACK: △
12.GREEN PRODUCT IDENTIFICATION LABEL IN PACKING: G.P. PASS
13.FOR WAVE SOLDERING LEAD-FREE PROCESS.
13.FOR WIRE PRODUCT ONLY.

YYMMDD
- DD: DAY
- MM: MONTH
- YY: YEAR

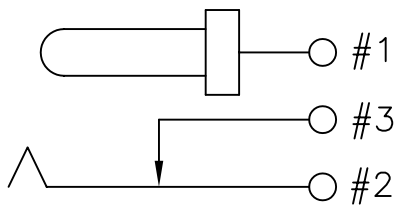

CIRCUIT

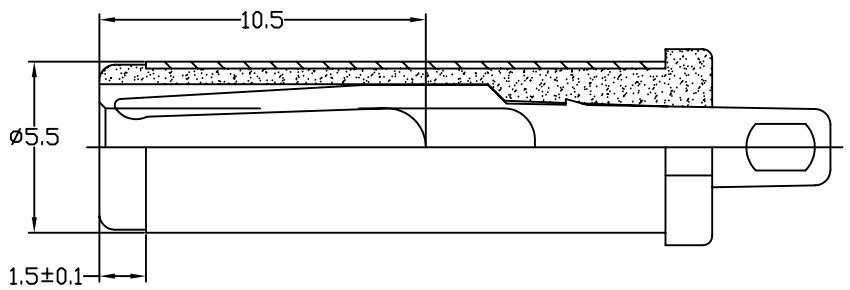

MATE PLUG

NO	DESCRIPTION	QTY	MATERIAL	PLATING & COLOR
Ⓔ	TERMINAL	1	SUS 0.3t	
Ⓓ	CONTACT PIN	1	BRASS ø2.5	SILVER PLATING
Ⓒ	SHUNT TERMINAL	1	BRASS 0.4t	SILVER PLATING
Ⓑ	TIP SPRING	1	COPPER ALLOY 0.3t	SILVER PLATING
Ⓐ	BODY	1	PBT, UL94V-0	BLACK COLOR

UNLESS OTHERWISE SPECIFED TOLERANCES

DECIMALS:
X :±0.3
X.X :±0.2
X.XX :±0.1

ANGLES:
X :±2°
X.X :±1°

Singatron Enterprise Co., Ltd.
信音企業股份有限公司

TITLE	DC POWER JACK (FOR WIRE PORDUCT ONLY)		
DWN	AMY 2005.6.16	PART NO. 2DC-0268-B01	
CHKD	KAN 2005.6.16	SCALE:4/1	UNIT: MM
APVD	ALAN 2005.6.17	SIZE: A3	SHEET:1OF1
			REV: B

Form: 1